BOLYMIN

BC2004A2

Feature

1. COB with metal frame
2. 5x7 dots with cursor
3. Built-in controller ST7066 or equivalent
4. + 5V single power supply
5. 1/16 duty cycle
6. LED B/L pins: 15/16, or A/K, or 1/2
7. Option: LED array/edge B/L, EL B/L
8. Option: +3V single power supply
9. Option: Negative Voltage

Mechanical Data

Item	Standard Value	Unit
Module Dimension	98.0 x 60.0	mm
Viewing Area	77.0 x 25.2	mm
Dot Size	0.55 x 0.55	mm
Character Size	2.95 x 4.75	mm

Pin Assignment

Pin	Symbol	Function
1	Vss	GND
2	Vdd	+5V (+3V option)
3	Vo	Contrast adjustment
4	RS	H/L register select signal
5	R/W	H/L read/write signal
6	E	H --> L enable signal
7~14	DB0~7	H/L data bus line
15	A	Power supply for B/L (+)/
16	K	Power supply for B/L (GND)

Electronic Characteristics

Item	Symbol	Condition	Typical Value	Unit
Input Voltage	Vdd	Vdd = +5V	5.0	V
Supply Current	Idd	Vdd = +5V	1.6	mA
LCD Driving Voltage	Vdd-Vo	25°C	4.5	V
LED Forward Voltage (yellow-green)	Vf	25°C	4.2	V
LED Forward Current	If	25°C	240	mA
EL Power Voltage	Vel	Vel=110Vac/400Hz		V
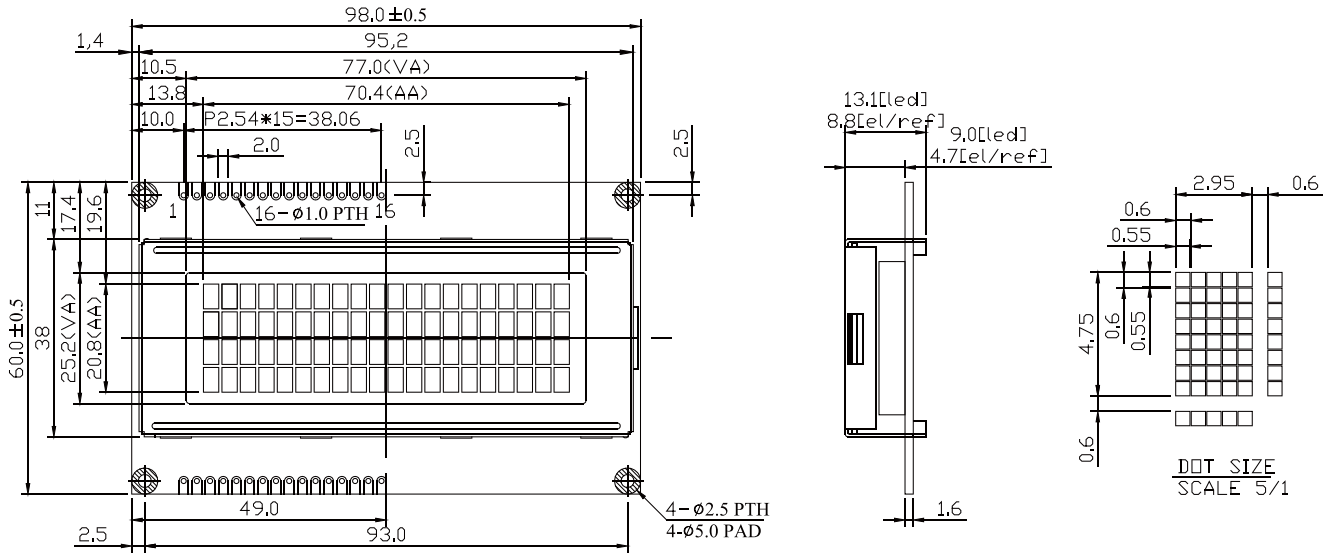
Dimension