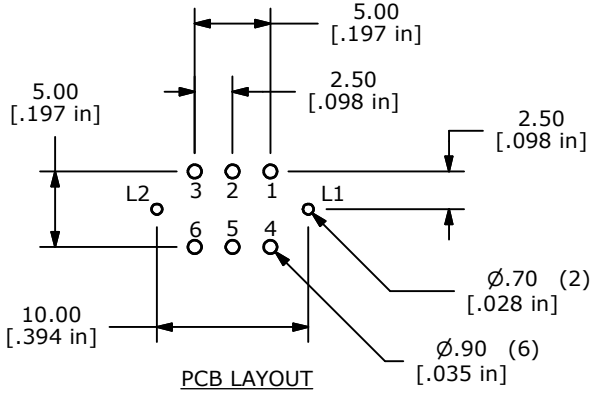

PCB LAYOUT

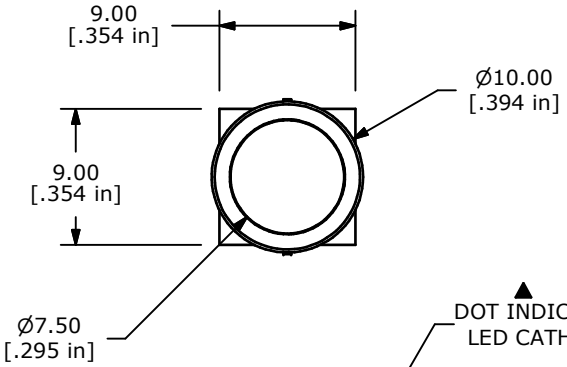

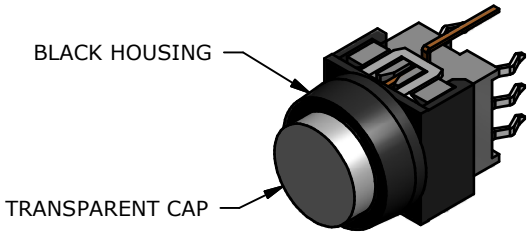

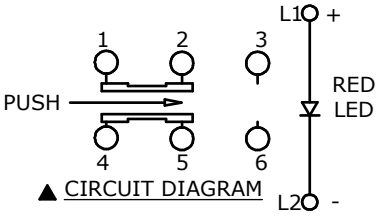

▲ CIRCUIT DIAGRAM

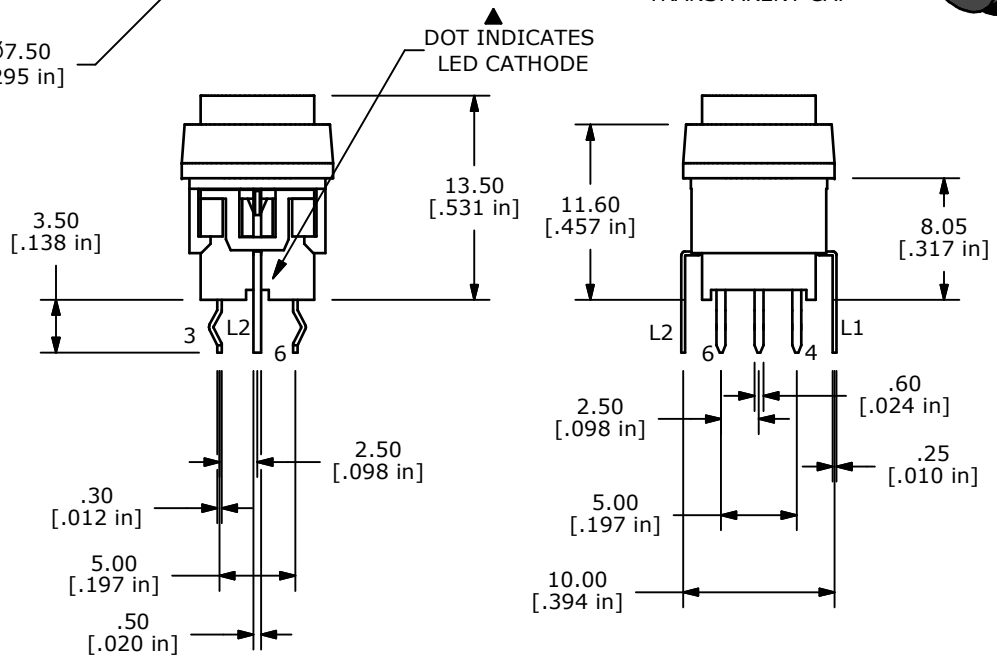

NOTES:
1. ALL DIMENSIONS IN MM [INCH]
2. GENERAL TOLERANCE: X.X=±0.4
   X.XX=±0.25
3. TERMINAL NUMBERS FOR REF ONLY
4. CONTACT RATING: CURRENT: 100mA
   VOLTAGE: 30 VDC
5. OPERATING LIFE: 50,000 MAKE-AND-BREAK CYCLES
6. INSULATION RESISTANCE: 500VDC, 100MΩ. MIN.
7. OPERATING FORCE: 250gf ± 100 GRAMS
8. OPERATING TEMP.: -20°C to 70°C
▲ 9. TRAVEL: LATCHING
   1.50 ± 0.3mm FULL TRAVEL
10. CONTACT RESISTANCE: 50 mΩ. MAX.
11. ▲ DENOTES CRITICAL PARAMETER.
12. 2002/95/EC (ROHS) COMPLIANT
▲13. LED COLOR: RED

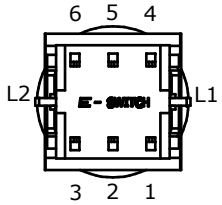

▲

LED SPECS	UNITS	RED
FORWARD CURRENT	mA	20
FORWARD VOLTAGE @20mA	V	1.9-2.5
LUMINOUS INTENSITY @ 10mA	MCD	200

REV	PCR NO	DESCRIPTION	DATE	BY
A	21144	RELEASE FOR PRODUCTION	5/31/13	EBP

THE INFORMATION CONTAINED IN THIS DOCUMENT IS PROPRIETARY TO E-SWITCH AND IS NOT TO BE COPIED OR TRANSFERRED

E-SWITCH®

TITLE LP4EE1PBBTR

SCALE	DATE	DR	DWG	REV
	5/31/2013	EBP	B240047	A