Rev	AWO #	Description	Date	Appr
-	11018	RELEASED	1/13/11	

APPROVED: _____

DATE: _____ TITLE: _____

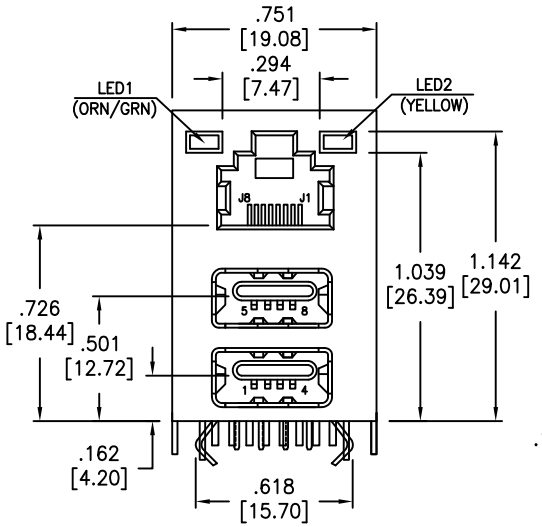

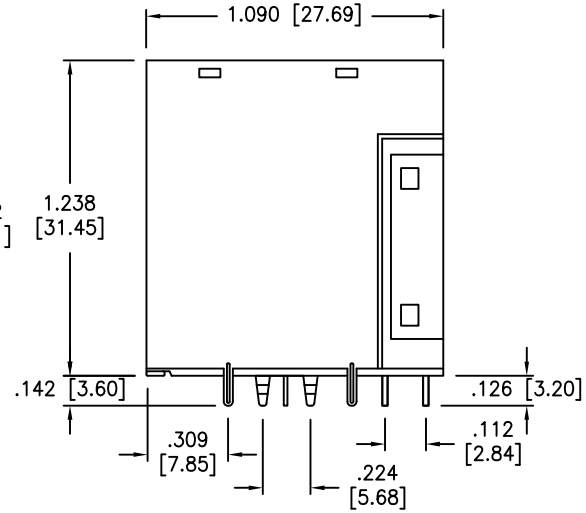

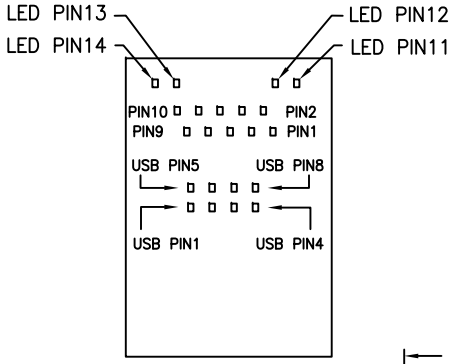

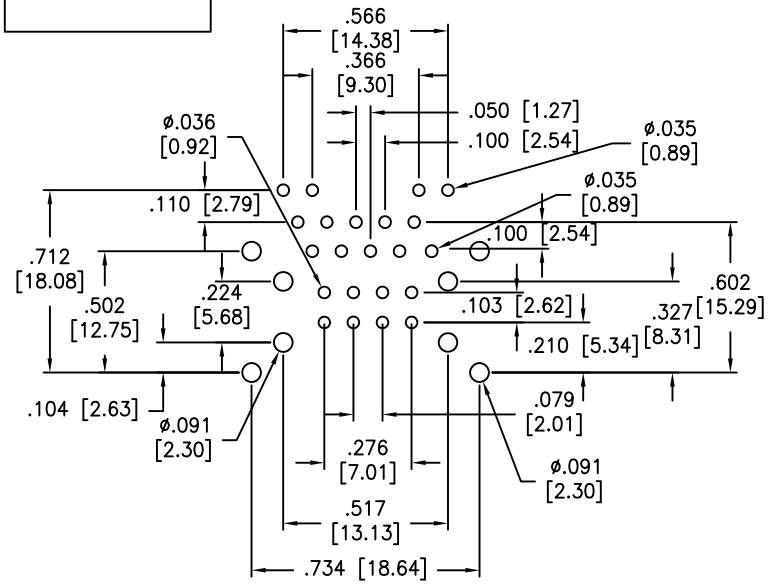

RECOMMENDED PCB LAYOUT
(TOP VIEW)

X	PLATING
0	15 µin Gold
1	30 µin Gold
2	50 µin Gold

SPECIFICATIONS:

Material:
Insulator: PBT, glass reinforced , thermoplastic, rated UL 94V–0
Insulator color: Black
Contacts: Copper Alloy
Shield: Copper Alloy, Nickel plated

Contact Plating:
Gold Flash over Nickel underplate on contact area,
Tin over Copper underplate on tails
(See chart for thickness.)

Electrical:
Operating voltage: 150 VAC max
Current rating: 1.5 Amps max
Contact Resistance: 20 mohms max. initial
Insulation resistance: 500 Mohms min @ 500 VDC
Dielectric withstanding voltage: 1000 VAC for 1 minute

Temperature Rating:
Operating temperature: 0°C to +70°C

Environmental:
Lead free, RoHS compliant.
Recommended soldering temp: 235°C for 5 sec.

RoHS COMPLIANT

UNLESS OTHERWISE SPECIFIED
ALL DIMENSIONS ARE INCHES [MM]
TOLERANCES: EXCEPT AS NOTED

INCHES		HOLES	
.X	± .10	Ø.X	±.10
.XX	± .020	Ø.XX	±.015
.XXX	± .015	Ø.XXX	±.010

APPROVALS		DATE
DRAWN	DY	1/13/11
CHECKED		
APPROVED		

ADAM TECH
909 Rahway Avenue, Union, NJ 07083
Phone: 908-687-5000 Fax: 908-687-5710

TITLE: MODULAR JACK 8P8C & DUAL USB GANGED W/ LED1 ORANGE/ GREEN, LED2 YELLOW

SIZE	PART NO.	REV.
X	MTJ-DUSB-88JX1-LL-M139	-

REF: S00043C | SCALE: NTS | SHEET 1 OF 2