PART NAME	PLASTICASE (STYLE A)	PART No.	PC-11403

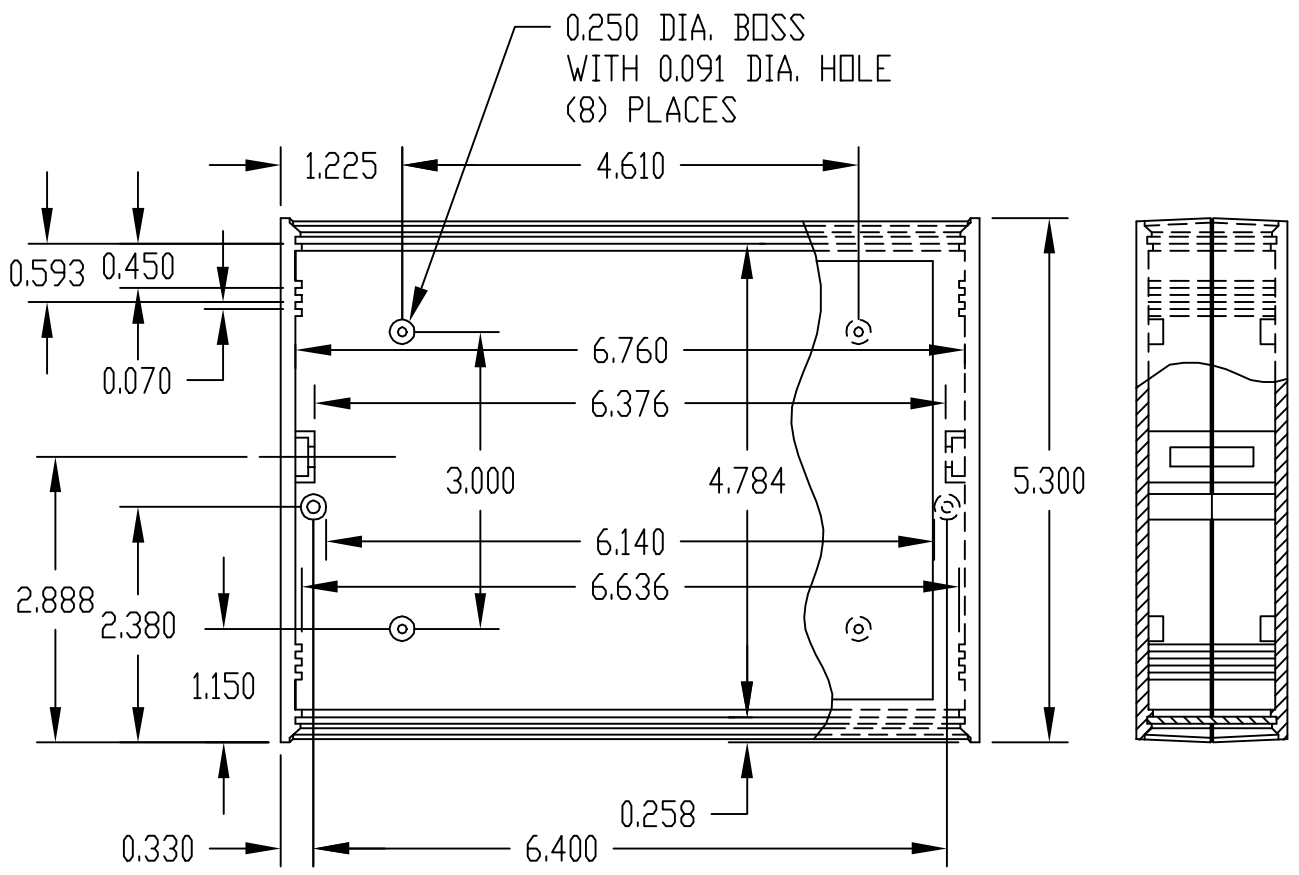

MATERIAL: IMPACT RESISTANT POLYSTYRENE (UL94-HB)

FINISH: DOUBLE-TEXTURED PC BONE GRAY

TWO (2) #4 x 1.000" LG. SCREWS & FOUR (4) RUBBER FEET SUPPLIED WITH CASE FOR ASSEMBLY.

NOTE: MOUNTING BOSSES USE EITHER M2.5 METRIC OR #4 STD. SHEET METAL SCREWS x 0.250" LG. (NOT SUPPLIED)

ALL DIMENSIONS HAVE ±0.015 TOLERANCE UNLESS OTHERWISE SPECIFIED

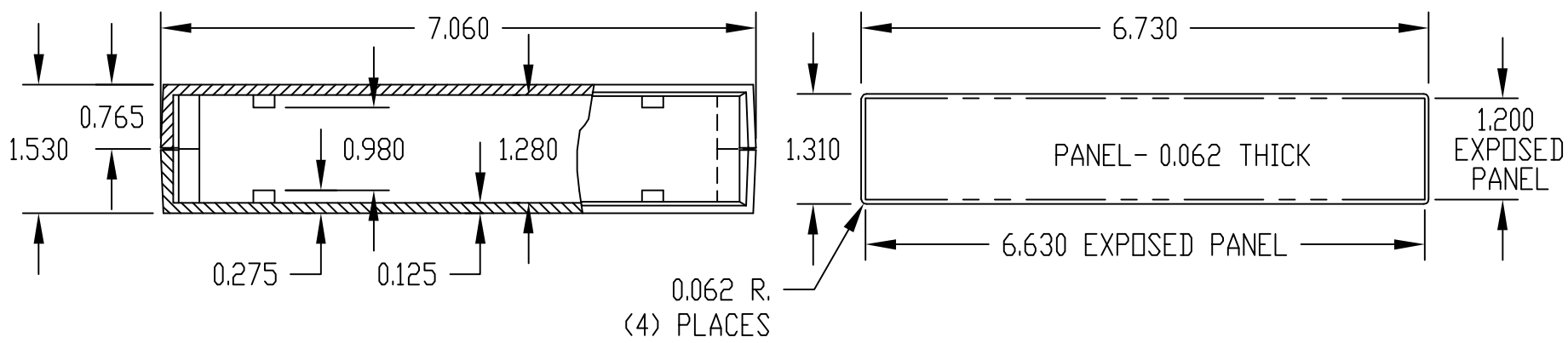

PART NAME	POTTING BOX (STYLE A)	PART No.	PB-1558 & PB-1559 / PB-1574 TO PB-1583

MATERIAL: ABS THERMOPLASTIC (FLAMMABILITY RATING OF 94-VO AT 0.070" THICKNESS AND CONTINUOUS USE TEMPERATURE OF 70° C.)

COLOR: BLACK

FINISH: OUTSIDE SURFACES ARE TEXTURED FINISH.

COVER REDUCES INSIDE HEIGHT BY 0.075, EXCEPT ON PB-1577 COVER REDUCES INSIDE HEIGHT BY 0.060 & PB-1583 COVER REDUCES INSIDE HEIGHT BY 0.110.

ALL COVERS HAVE SMOOTH SURFACES.

LENGTH AND WIDTH DIMENSIONS ARE TAKEN FROM CLOSED END OF THE BOX. DIMENSIONS INCREASE SLIGHTLY AT OPEN END DUE TO TAPER.

ALL DIMENSIONS HAVE ±0.010 TOLERANCE UNLESS OTHERWISE SPECIFIED

SHIPPED IN PACKAGES OF TEN (10).

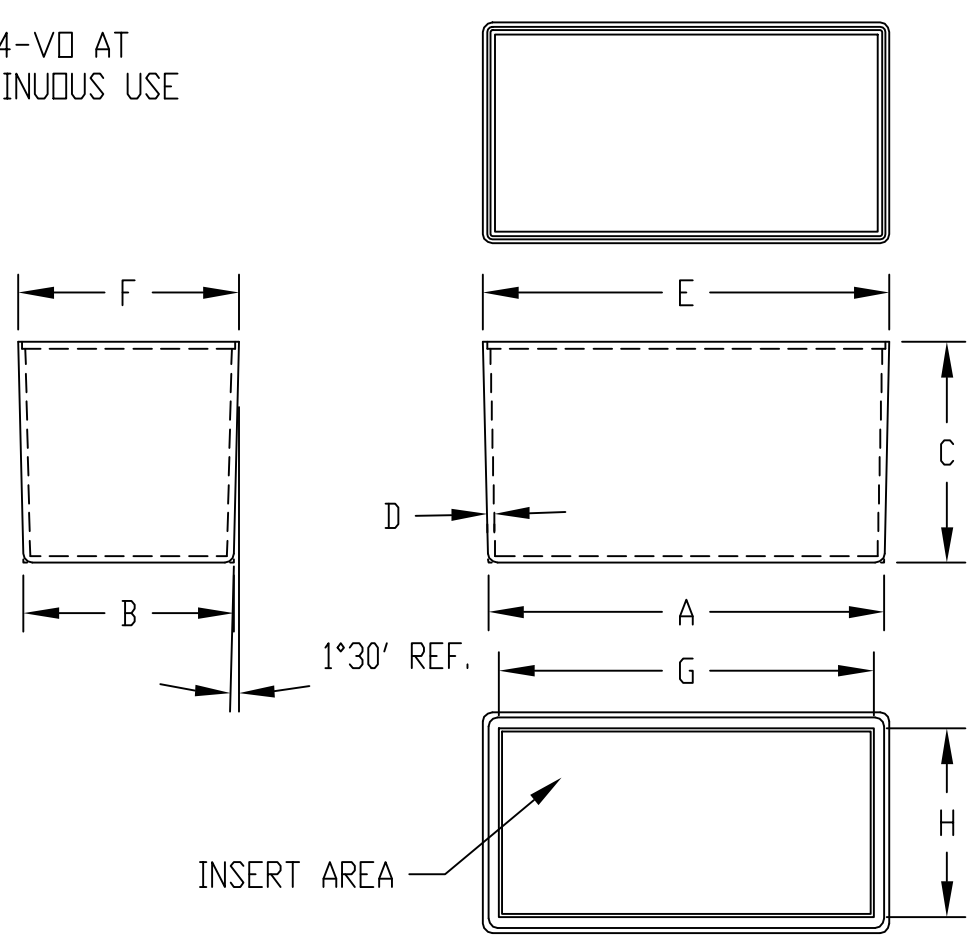

PART No.	A	B	C	D	E	F	G	H	OPTIONAL COVER
PB-1558	2.000	1.500	1.000	0.070	2.052	1.552	-----	-----	PBC-1558-CN
PB-1559	3.000	2.000	1.500	0.070	3.078	2.078	-----	-----	PBC-1575-C
PB-1574	2.000	2.000	1.500	0.070	2.078	2.078	-----	-----	PBC-1574-C
PB-1575	3.030	2.030	0.900	0.070	3.078	2.078	-----	-----	PBC-1575-C
PB-1576	3.000	3.000	1.500	0.070	3.078	3.078	-----	-----	PBC-1576-C
PB-1577	1.030	1.030	0.780	0.060	1.072	1.072	-----	-----	PBC-1577-C
PB-1578	4.000	2.125	2.230	0.070	4.105	2.230	3.790	1.906	PBC-1578-C
PB-1579	1.500	1.250	0.800	0.070	1.542	1.292	-----	-----	PBC-1579-C
PB-1580	4.000	1.750	1.000	0.070	4.052	1.802	-----	-----	PBC-1580-C
PB-1581	2.079	1.280	0.445	0.070	2.097	1.300	-----	-----	PBC-1581-C
PB-1582	4.063	2.188	0.900	0.070	4.105	2.230	-----	-----	PBC-1578-C
PB-1583	4.375	3.125	2.000	0.100	4.473	3.223	3.974	2.723	PBC-1583-C