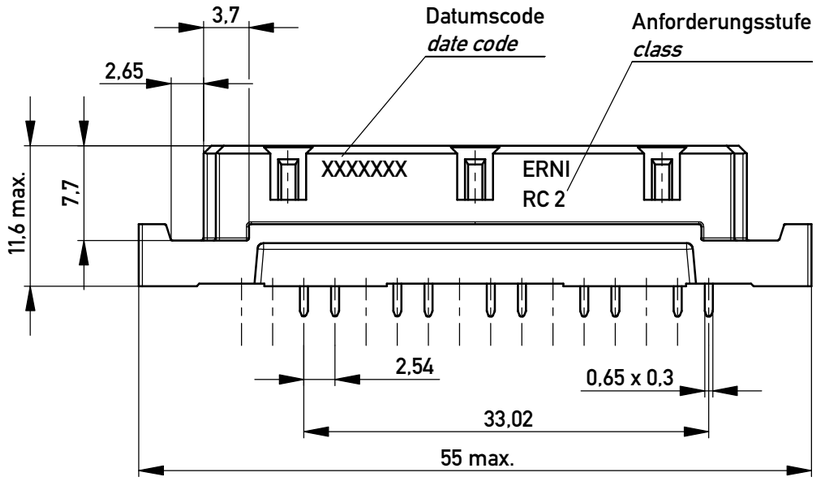

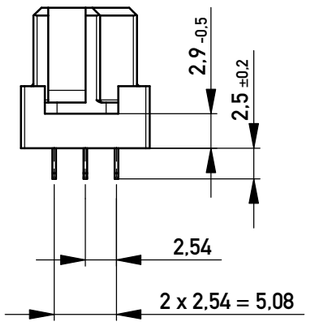

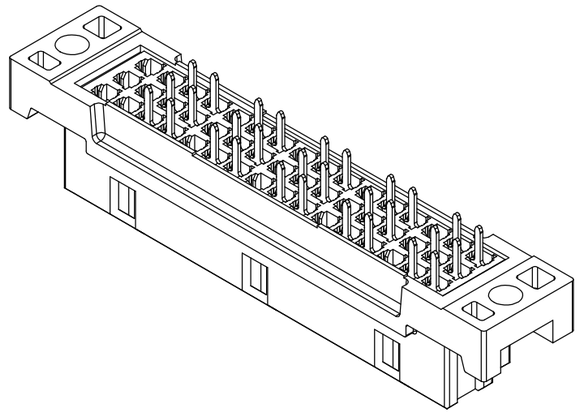

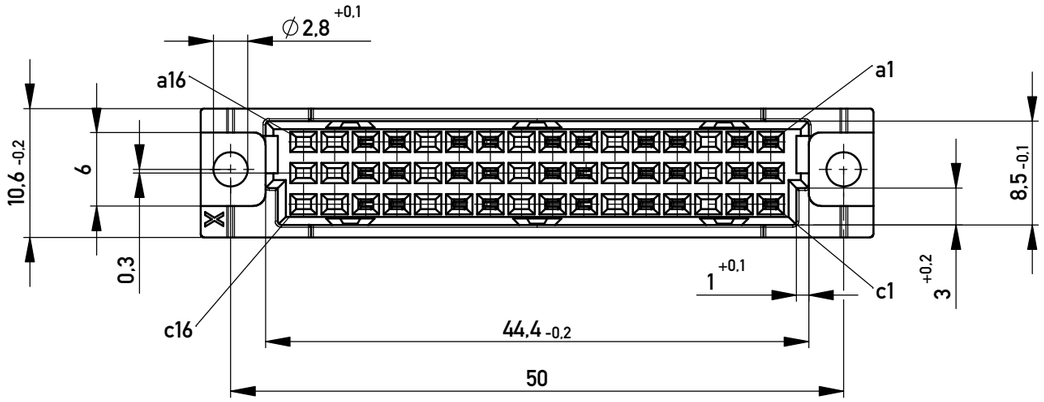

Bestückungsplan / *contact layout*

▩ bestückt / assembled

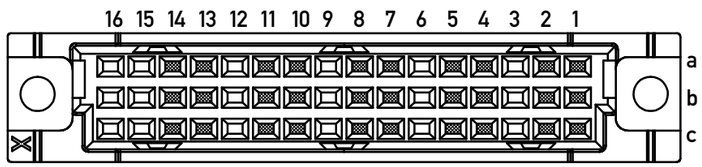

Tauchlötanschluss 0,65x0,3 / *solder terminal 0,65x0,3*
Bauart 7 / *type 7*
Anforderungsstufe 2 = 400 Steckzyklen / *performance class 2 = 400 mating cycles*
Fehlende Maße und Angaben nach IEC 60 603-2 / DIN EN 60 603-2
Missing information and dimensions per IEC 60 603-2

Leiterplatten-Lochbild / *PCB drillhole Pattern*

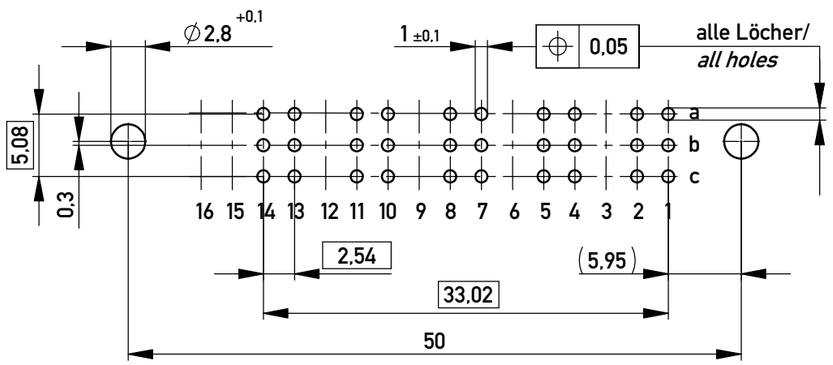

Copyright by ERNI Production GmbH & Co. KG
Proprietary notice pursuant to ISO 16016 to be observed.

Information:	Tolerances	All Dimensions in mm	Scale 2:1
All rights reserved. Only for Information. To ensure that this is the latest version of this drawing, please contact one of the ERNI companies before using.	Subject to modification without prior notice. Drawing will not be updated.		Designation **Federleiste C/2 30 Löt** ***Fem. Connector C/2 30 Solder***
		www.ERNI.com	**101304110001** — I — A3
Index	Date		Class STVC/2