SHEET OF

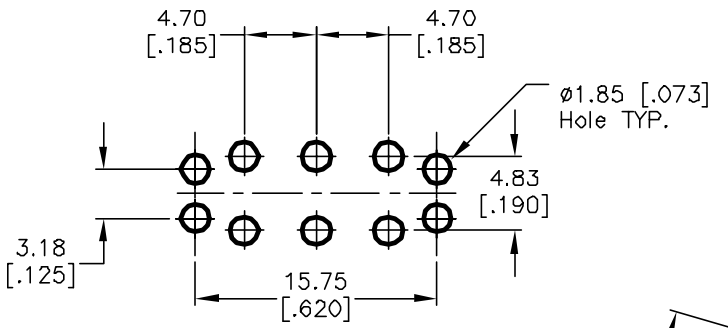

RECOMMENDED P.C.B. LAYOUT

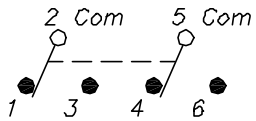

CIRCUIT: 2PDT

SWITCH FUNCTION		
POS. 1	POS. 2	POS. 3
(ON)	OFF	(ON)
2-3,5-6	OPEN	2-1,5-4

( )=Momentary

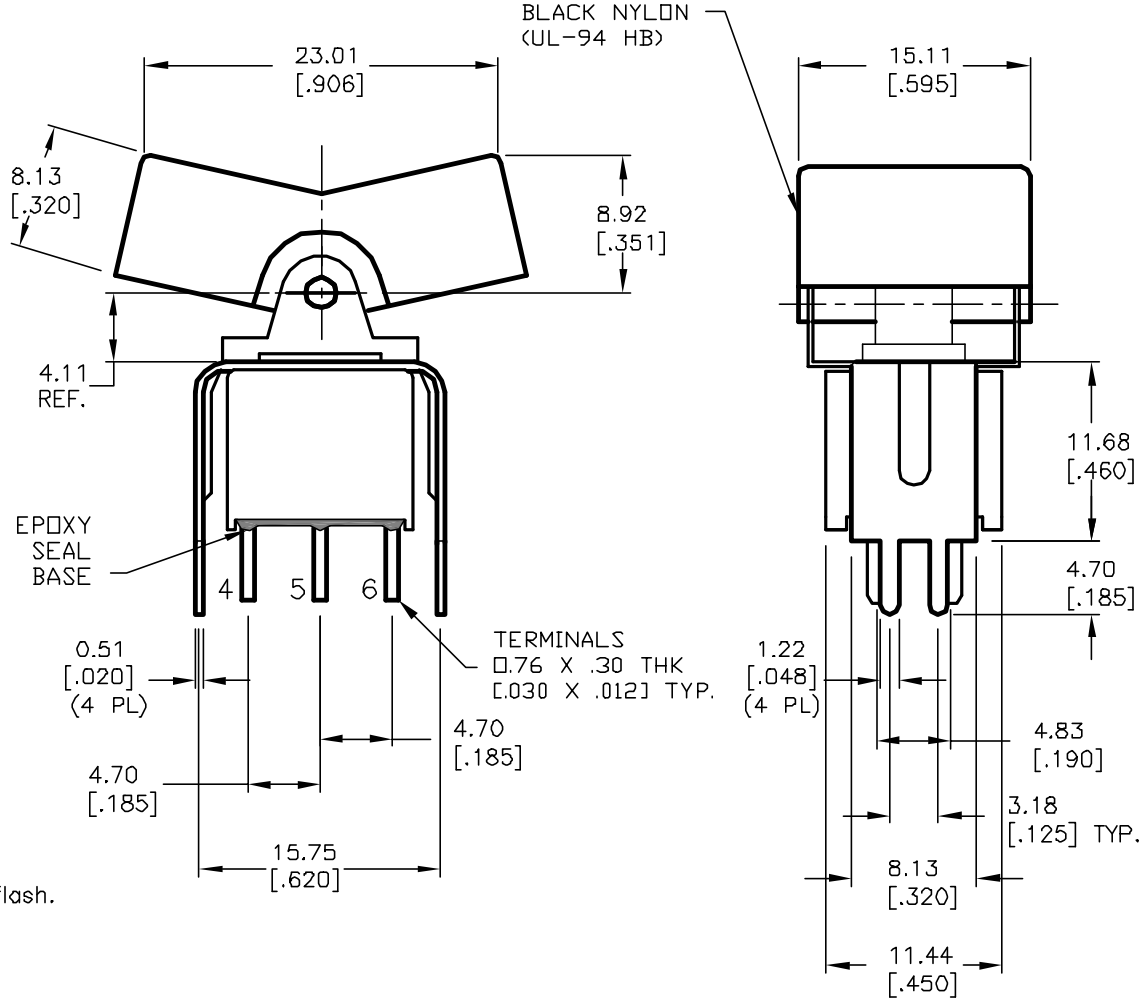

NOTES:

1. ALL DIMENSIONS IN MM [INCH]
2. GENERAL TOLERANCE: X.X=±0.4
   X.XX=±0.25
3. TERM. NOS. FOR REF. ONLY
4. RATING: 5A @120VAC OR 28VDC;
   2A @250VAC
5. MATERIAL: FIXED TERMINAL & MOVING CONTACT
   Copper Alloy w/SILVER PLATE over Gold flash.
6. CONTACT RESISTANCE: 10mILLI Ohms max initial
   @2-4VDC, 100mA for AG & AU
7. ELECTRICAL LIFE: 30,000 make-and-break
   cycles at full load.
8. INSULATION RESISTANCE: 1,000M ohm min.
9. DIELECTRIC STRENGTH: 1000V RMS @sea level
10. OPERATING TEMP.: -30°C to 85°C

REV.	ECN No.	DESCRIPTION	DATE	CHKD
A	12444	RELEASED FOR PRODUCTION	9/24/02	CJB

THE INFORMATION CONTAINED IN THIS DOCUMENT IS PROPRIETARY TO E-SWITCH AND IS NOT TO BE COPIED OR TRANSFERRED

E-SWITCH®

TITLE 300A WDP-4 J3 VS2 Q E

SCALE	DATE	DR	DWG	REV
2:1	9/24/02	CJB	T302018	A