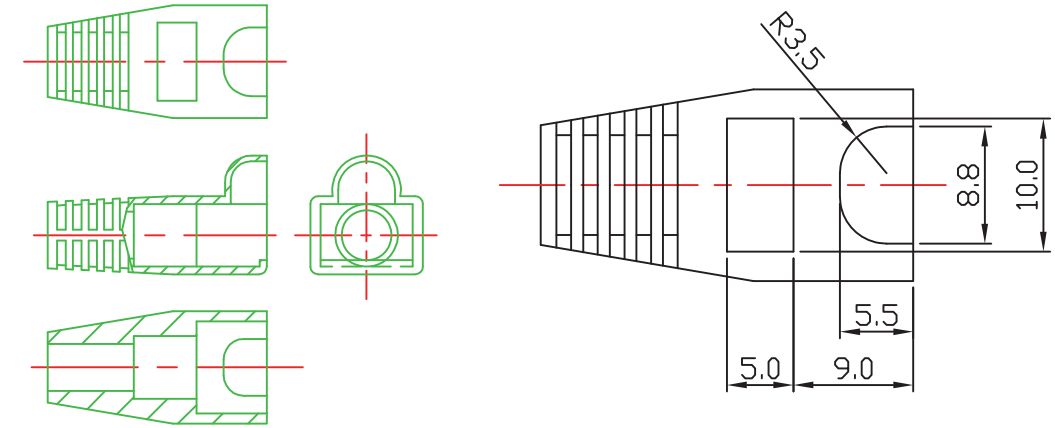

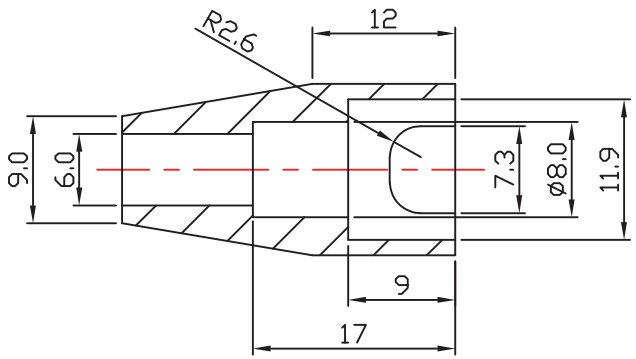

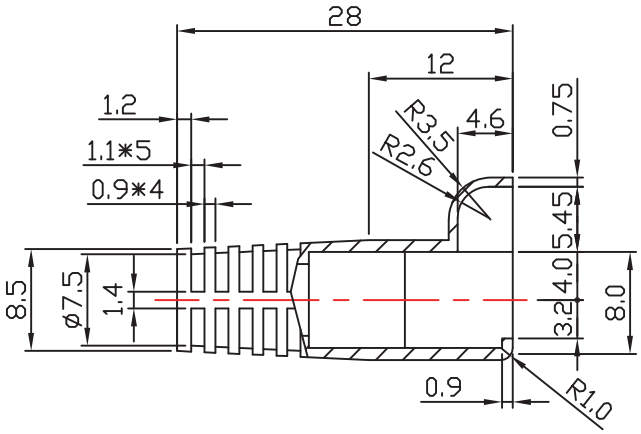

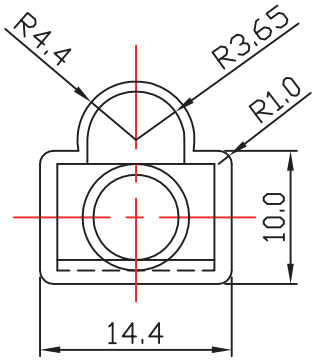

Material:

- For 8P8C RJ45 modular plugs
- Suitable for shielded and non-shielded modular plugs
- With latch protection
- Operating Temperature: -40°C ~ 70°C

***Not for Hirose type**

Unit: MM

RoHS Complaint

Scale	1:1						Name	Item No. **A-MOT/G-8/8-R**
TOLERANCE						Drawn	11.21.11	Chappell
X.X	±0.40					Approved		Title: Kink protection boot - RJ45/8P8C modular plugs, Green
X.XX	±0.25							
X.XXX	±0.15							Drawing No. rev00
Angle	±3°							
			Modification	Date	Name			Replace / Sheet

ASSMANN WSW components