MMBD1010LT1

Switching Diode

Part of the GreenLine™ Portfolio of devices with energy−conserving traits.

This switching diode has the following features:

- Very Low Leakage (≤ 500 pA) promotes extended battery life by decreasing energy waste. Guaranteed leakage limit is for each diode in the pair contingent upon the other diode being in a non−forward−biased condition.
- Offered in four Surface Mount package types
- Available in 8 mm Tape and Reel in quantities of 3,000

Applications

- ESD Protection
- Reverse Polarity Protection
- Steering Logic
- Medium−Speed Switching

ON Semiconductor®

http://onsemi.com

MMBD1010LT1

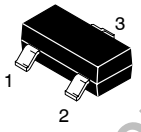

CASE 318-08, STYLE 9
SOT-23 (TO-236AB)

MMBD2010T1

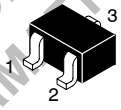

CASE 419-02, STYLE 5
SC−70/SOT−323

MMBD3010T1

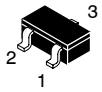

CASE 318D-04, STYLE 3
SC−59

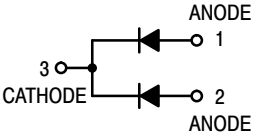

MAXIMUM RATINGS

Rating	Symbol	Value	Unit
Continuous Reverse Voltage	V_R	30	Vdc
Peak Forward Current	I_F	200	mAdc
Peak Forward Surge Current	I_{FM} (surge)	500	mA

DEVICE MARKING

MMBD1010LT1 = A5
MMBD2010T1 = DP
MMBD3010T1 = XS

THERMAL CHARACTERISTICS

Characteristic	Symbol	Max	Unit
Total Device Dissipation FR-4 Board (1)	P_D		mW
T_A = 25°C MMBD1010LT1, MMBD3010T1		225	
MMBD2010T1		150	
Derate above 25°C MMBD1010LT1, MMBD3010T1		1.8	mW/°C
MMBD2010T1		1.2	
Thermal Resistance Junction to Ambient	$R_{\theta JA}$		°C/W
MMBD1010LT1, MMBD3010T1		556	
MMBD2010T1		833	
Junction and Storage Temperature	T_J, T_{stg}	−55 to +150	°C

(1) Device mounted on a FR-4 glass epoxy printed circuit board using the minimum recommended footprint.

Preferred devices are Motorola recommended choices for future use and best overall value.

August, 2006 − Rev. 2
Publication Order Number:
MMBD1010LT1/D

ELECTRICAL CHARACTERISTICS (T_A = 25°C unless otherwise noted)

Characteristic	Symbol	Min	Max	Unit
OFF CHARACTERISTICS				
Reverse Breakdown Voltage (I_{BR} = 100 μA)	$V_{(BR)}$	30	—	V
Reverse Voltage Leakage Current (V_R = 75 V)(2)	I_R	—	500	pA
Forward Voltage (I_F = 1.0 mA) (I_F = 10 mA)	V_F	— —	850 950	mV
Diode Capacitance (V_R = 0 V, f = 1.0 MHz)	C_D	—	2.0	pF
Reverse Recovery Time (I_F = I_R = 10 mA) (Figure 1)	t_{rr}	—	3.0	μs

(2) Guaranteed leakage limit is for each diode in the pair contingent upon the other diode being in a non−forward−biased condition.

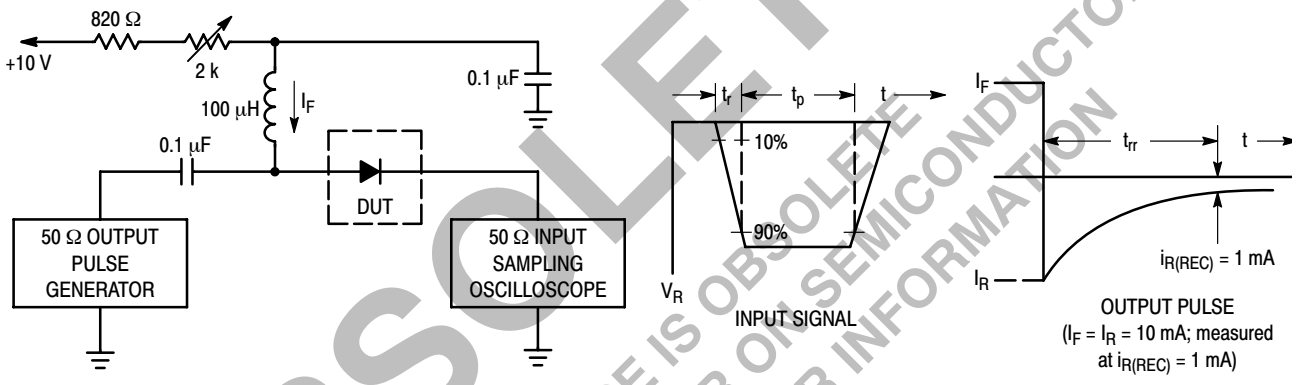

Notes: 1. A 2.0 kΩ variable resistor adjusted for a Forward Current (I_F) of 10 mA.
2. Input pulse is adjusted so $I_{R(peak)}$ is equal to 10 mA.
3. t_p » t_{rr}

Figure 1. Recovery Time Equivalent Test Circuit

MINIMUM RECOMMENDED FOOTPRINT FOR SURFACE MOUNTED APPLICATIONS

Surface mount board layout is a critical portion of the total design. The footprint for the semiconductor packages must be the correct size to insure proper solder connection interface between the board and the package. With the correct pad geometry, the packages will self align when subjected to a solder reflow process.

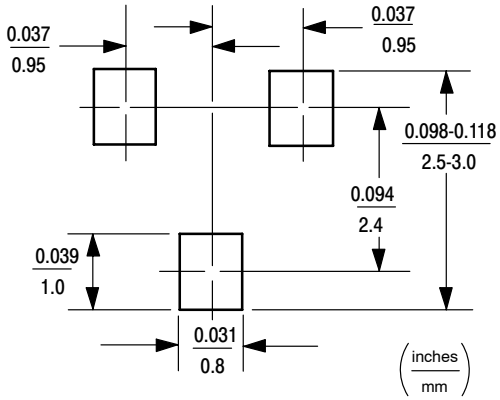

SC−59

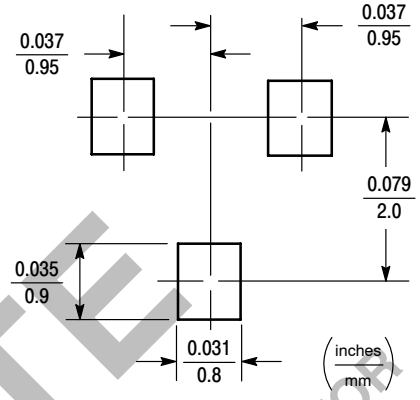

SOT−23

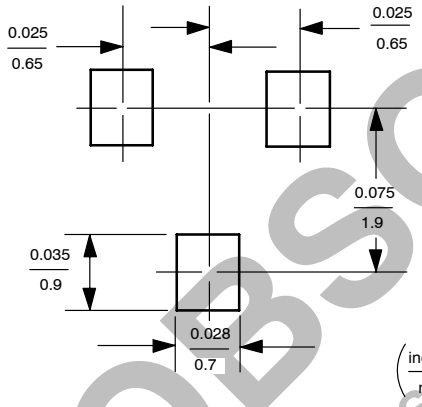

SC−70/SOT−323

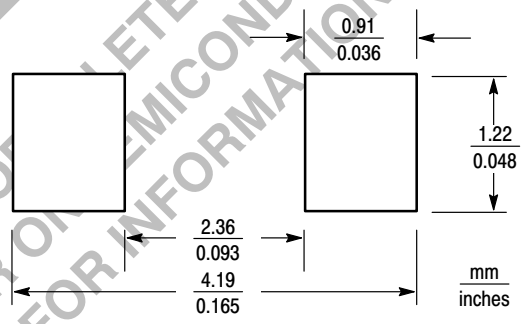

SOD−123

POWER DISSIPATION FOR A SURFACE MOUNT DEVICE

The power dissipation for a surface mount device is a function of the drain/collector pad size. These can vary from the minimum pad size for soldering to a pad size given for maximum power dissipation. Power dissipation for a surface mount device is determined by $T_{J(max)}$, the maximum rated junction temperature of the die, $R_{\theta JA}$, the thermal resistance from the device junction to ambient, and the operating temperature, T_A. Using the values provided on the data sheet, P_D can be calculated as follows:

$$P_D = \frac{T_{J(max)} - T_A}{R_{\theta JA}}$$

The values for the equation are found in the maximum ratings table on the data sheet. Substituting these values into the equation for an ambient temperature T_A of 25°C, one can calculate the power dissipation of the device. For example, for a SOT−23 device, P_D is calculated as follows.

$$P_D = \frac{150°C - 25°C}{556°C/W} = 225 \text{ milliwatts}$$

The 556°C/W for the SOT−23 package assumes the use of the recommended footprint on a glass epoxy printed circuit board to achieve a power dissipation of 250 milliwatts. There are other alternatives to achieving higher power dissipation from the surface mount packages. One is to increase the area of the drain/collector pad. By increasing the area of the drain/collector pad, the power dissipation can be increased. Although the power dissipation can almost be doubled with this method, area is taken up on the printed circuit board which can defeat the purpose of using surface mount technology.

Another alternative would be to use a ceramic substrate or an aluminum core board such as Thermal Clad™. Using a board material such as Thermal Clad, an aluminum core board, the power dissipation can be doubled using the same footprint.

SOLDERING PRECAUTIONS

The melting temperature of solder is higher than the rated temperature of the device. When the entire device is heated to a high temperature, failure to complete soldering within a short time could result in device failure. Therefore, the following items should always be observed in order to minimize the thermal stress to which the devices are subjected.

- Always preheat the device.
- The delta temperature between the preheat and soldering should be 100°C or less.*
- When preheating and soldering, the temperature of the leads and the case must not exceed the maximum temperature ratings as shown on the data sheet. When using infrared heating with the reflow soldering method, the difference should be a maximum of 10°C.
- The soldering temperature and time should not exceed 260°C for more than 10 seconds.
- When shifting from preheating to soldering, the maximum temperature gradient should be 5°C or less.
- After soldering has been completed, the device should be allowed to cool naturally for at least three minutes. Gradual cooling should be used as the use of forced cooling will increase the temperature gradient and result in latent failure due to mechanical stress.
- Mechanical stress or shock should not be applied during cooling

* Soldering a device without preheating can cause excessive thermal shock and stress which can result in damage to the device.

SOLDER STENCIL GUIDELINES

Prior to placing surface mount components onto a printed circuit board, solder paste must be applied to the pads. A solder stencil is required to screen the optimum amount of solder paste onto the footprint. The stencil is made of brass or stainless steel with a typical thickness of 0.008 inches. The stencil opening size for the surface mounted package should be the same as the pad size on the printed circuit board, i.e., a 1:1 registration.

TYPICAL SOLDER HEATING PROFILE

For any given circuit board, there will be a group of control settings that will give the desired heat pattern. The operator must set temperatures for several heating zones, and a figure for belt speed. Taken together, these control settings make up a heating “profile” for that particular circuit board. On machines controlled by a computer, the computer remembers these profiles from one operating session to the next. Figure 2 shows a typical heating profile for use when soldering a surface mount device to a printed circuit board. This profile will vary among soldering systems but it is a good starting point. Factors that can affect the profile include the type of soldering system in use, density and types of components on the board, type of solder used, and the type of board or substrate material being used. This profile shows temperature versus time. The line on the graph shows the actual temperature that might be experienced on the surface of a test board at or near a central solder joint. The two profiles are based on a high density and a low density board. The Vitronics SMD310 convection/infrared reflow soldering system was used to generate this profile. The type of solder used was 62/36/2 Tin Lead Silver with a melting point between 177−189°C. When this type of furnace is used for solder reflow work, the circuit boards and solder joints tend to heat first. The components on the board are then heated by conduction. The circuit board, because it has a large surface area, absorbs the thermal energy more efficiently, then distributes this energy to the components. Because of this effect, the main body of a component may be up to 30 degrees cooler than the adjacent solder joints.

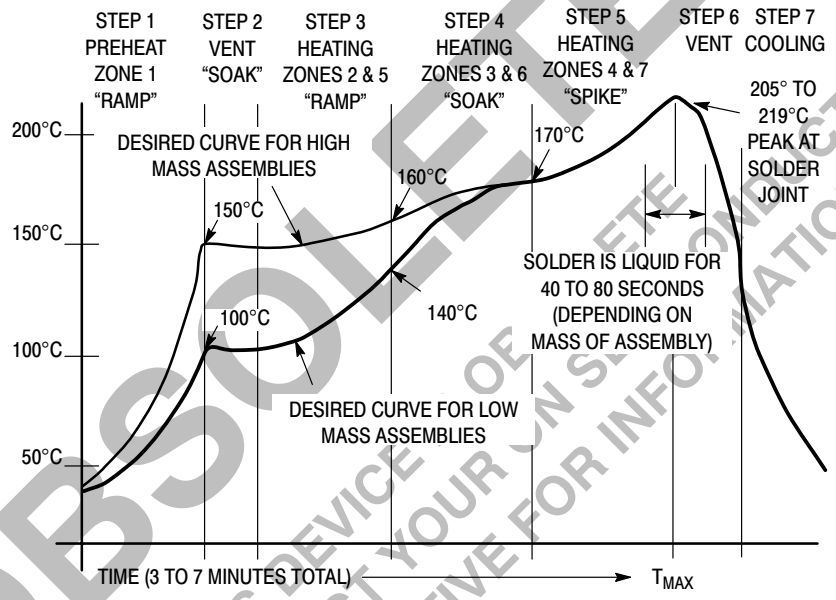

Figure 2. Typical Solder Heating Profile

PACKAGE DIMENSIONS

CASE 318−08
ISSUE AF
SOT−23 (TO−236AB)

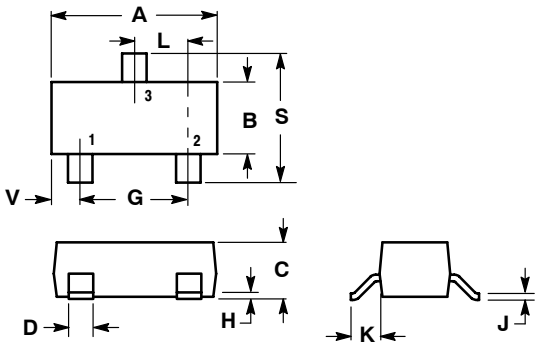

NOTES:
1. DIMENSIONING AND TOLERANCING PER ANSI Y14.5M, 1982.
2. CONTROLLING DIMENSION: INCH.
3. MAXIUMUM LEAD THICKNESS INCLUDES LEAD FINISH THICKNESS. MINIMUM LEAD THICKNESS IS THE MINIMUM THICKNESS OF BASE MATERIAL.

	INCHES		MILLIMETERS	
DIM	MIN	MAX	MIN	MAX
A	0.1102	0.1197	2.80	3.04
B	0.0472	0.0551	1.20	1.40
C	0.0350	0.0440	0.89	1.11
D	0.0150	0.0200	0.37	0.50
G	0.0701	0.0807	1.78	2.04
H	0.0005	0.0040	0.013	0.100
J	0.0034	0.0070	0.085	0.177
K	0.0140	0.0285	0.35	0.69
L	0.0350	0.0401	0.89	1.02
S	0.0830	0.1039	2.10	2.64
V	0.0177	0.0236	0.45	0.60

STYLE 9:
PIN 1. ANODE
2. ANODE
3. CATHODE

CASE 419−02
ISSUE H
SC−70/SOT−323

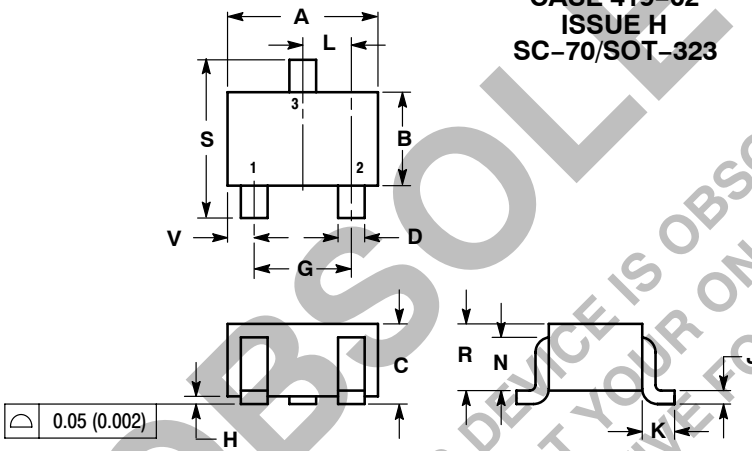

NOTES:
1. DIMENSIONING AND TOLERANCING PER ANSI Y14.5M, 1982.
2. CONTROLLING DIMENSION: INCH.

	INCHES		MILLIMETERS	
DIM	MIN	MAX	MIN	MAX
A	0.071	0.087	1.80	2.20
B	0.045	0.053	1.15	1.35
C	0.035	0.049	0.90	1.25
D	0.012	0.016	0.30	0.40
G	0.047	0.055	1.20	1.40
H	0.000	0.004	0.00	0.10
J	0.004	0.010	0.10	0.25
K	0.017 REF		0.425 REF	
L	0.026 BSC		0.650 BSC	
N	0.028 REF		0.700 REF	
R	0.031	0.039	0.80	1.00
S	0.079	0.087	2.00	2.20
V	0.012	0.016	0.30	0.40

STYLE 5:
PIN 1. ANODE
2. ANODE
3. CATHODE

CASE 318D−04
ISSUE F
SC−59

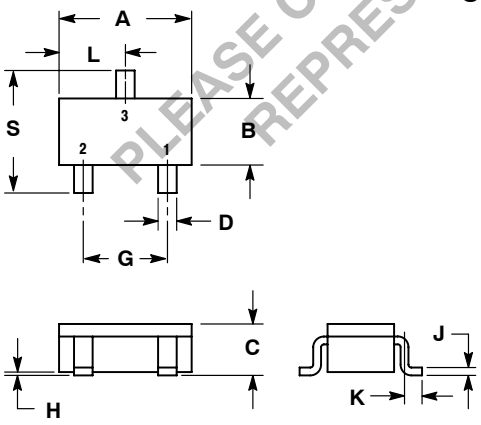

NOTES:
1. DIMENSIONING AND TOLERANCING PER ANSI Y14.5M, 1982.
2. CONTROLLING DIMENSION: MILLIMETER.

	MILLIMETERS		INCHES	
DIM	MIN	MAX	MIN	MAX
A	2.70	3.10	0.1063	0.1220
B	1.30	1.70	0.0512	0.0669
C	1.00	1.30	0.0394	0.0511
D	0.35	0.50	0.0138	0.0196
G	1.70	2.10	0.0670	0.0826
H	0.013	0.100	0.0005	0.0040
J	0.09	0.18	0.0034	0.0070
K	0.20	0.60	0.0079	0.0236
L	1.25	1.65	0.0493	0.0649
S	2.50	3.00	0.0985	0.1181

STYLE 3:
PIN 1. ANODE
2. ANODE
3. CATHODE

GreenLine is a trademark of Motorola, Inc.

PUBLICATION ORDERING INFORMATION

LITERATURE FULFILLMENT:
Literature Distribution Center for ON Semiconductor
P.O. Box 5163, Denver, Colorado 80217 USA
Phone: 303−675−2175 or 800−344−3860 Toll Free USA/Canada
Fax: 303−675−2176 or 800−344−3867 Toll Free USA/Canada
Email: orderlit@onsemi.com

N. American Technical Support: 800−282−9855 Toll Free USA/Canada
Europe, Middle East and Africa Technical Support:
Phone: 421 33 790 2910
Japan Customer Focus Center
Phone: 81−3−5773−3850

ON Semiconductor Website: **www.onsemi.com**

Order Literature: http://www.onsemi.com/orderlit

For additional information, please contact your local Sales Representative