THIS COPY IS PROVIDED ON A RESTRICTED BASIS AND IS NOT TO BE USED IN ANY WAY DETRIMENTAL TO THE INTERESTS OF PANDUIT CORP.

PART NUMBER	WEIGHT
MP530-C MP530-M	.045 LB/10 PCS (20.3 g/10 PCS)

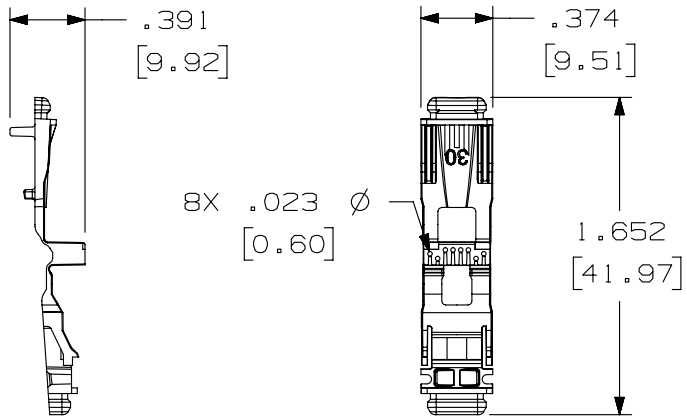

NOTES:
1. CATEGORY 5E UTP 30AWG MODULAR PLUG
2. MATERIAL: HOUSING, ADAPTER, STRAIN RELIEF BOOT-CLEAR PVC; CONTACT TERMINAL-PHOSPHOR BRONZE ELECTROPOLISHED AND PLATED WITH .000050" MIN. GOLD IN CONTACT AREA, GOLD FLASH OVER REMAINDER, .000100" MIN NICKEL UNDERPLATE.
3. PLUG ACCEPTS 4 PAIR CABLE .122"-.130" (3.1mm-3.3mm) DIAMETER WITH 30 AWG SOLID OR STRANDED CONDUCTORS WITH A MAXIMUM INSULATION DIAMETER OF .021"(.53mm).
4. MEETS DIMENSIONAL REQUIREMENTS OF FCC PART 68 AND IEC 60603-7. ALL DIMENSIONS MAXIMUM UNLESS OTHERWISE SPECIFIED.
5. TERMINAL CONTACT HEIGHT DIMENSION: .237±.005"(.60±.13mm) WITH PANDIT CRIMP TOOL.

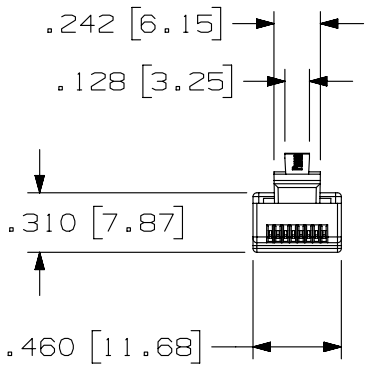

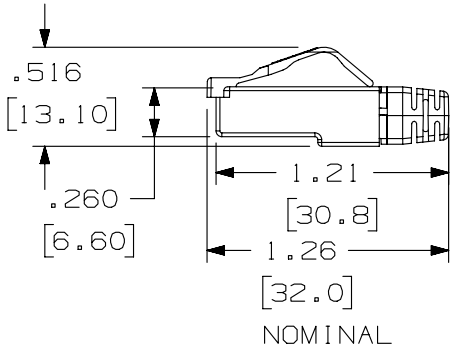

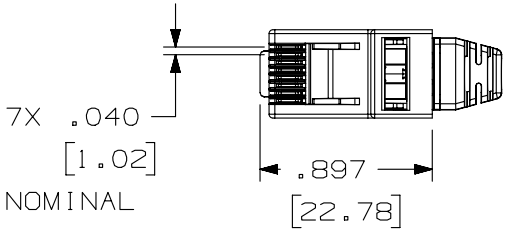

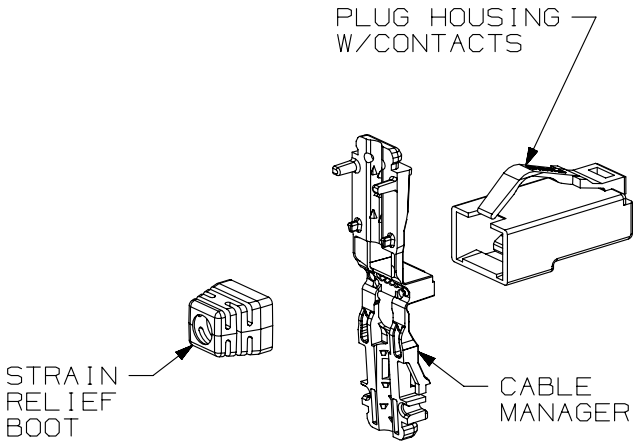

PART NUMBER	PRODUCT SPEC/PKG SPEC
SEE TABLE	N/A
I.I. NUMBER: N/A	WORK INSTRUCTION: N/A

TITLE

PAN-PLUG CATEGORY 5E 30 AWG UTP MODULAR PLUG WITH BOOT

CUSTOMER DRAWING

ITEM REVISION NAME: 11M280AD/00.PRT

DATASET FILE NAME: 11M280AD_DC02/00A.PRT

UNLESS OTHERWISE SPECIFIED, DIMENSIONAL TOLERANCES ARE: IN [mm]
.X ± .1 [2.54] .XXX ± .005 [.127]
.XX ± .01 [.25] ANGLES ± 5 °
THIRD ANGLE PROJECTION

MATERIAL: SEE NOTES

DRAWING NUMBER: 11M280AD-02

DRAWN BY	DATE	CHK	SCALE		SIZE
BJN	1-3-13	JCO	NONE	SHT 1 OF 1	A

REV	DATE	BY	CHK	APR	DESCRIPTION	ECN
R	1-3-13	BJN	JCO	EJH	RELEASED TO PRODUCTION	11M280AD-02