Rev	AWO #	Description	Date	Appr
-		RELEASED	9/08/09	

APPROVED: _____

DATE: _____ TITLE: _____

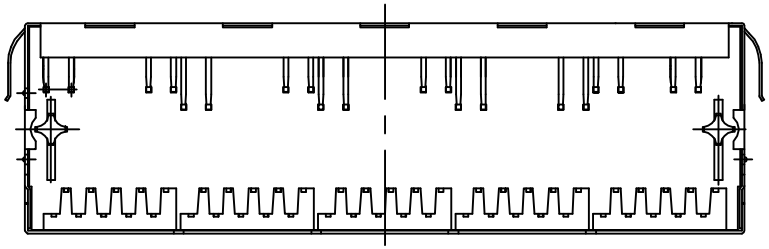

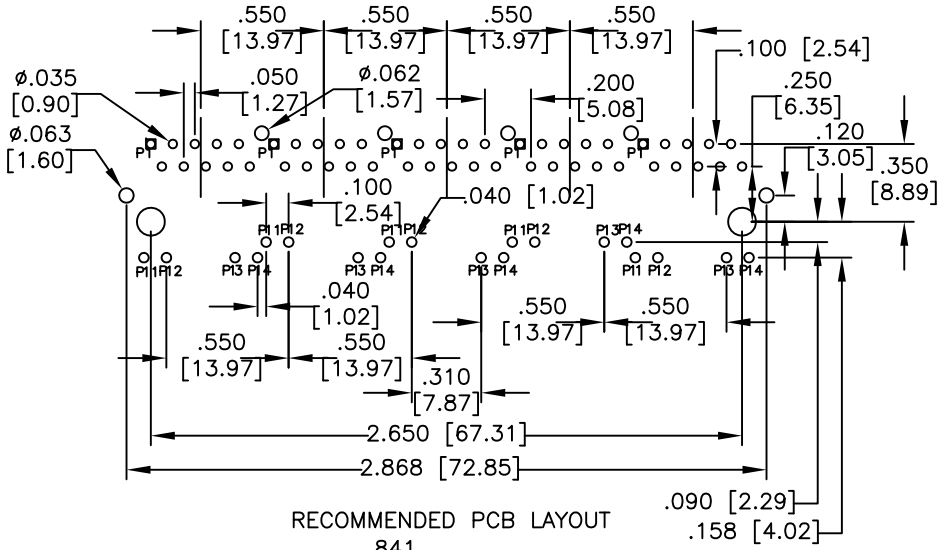

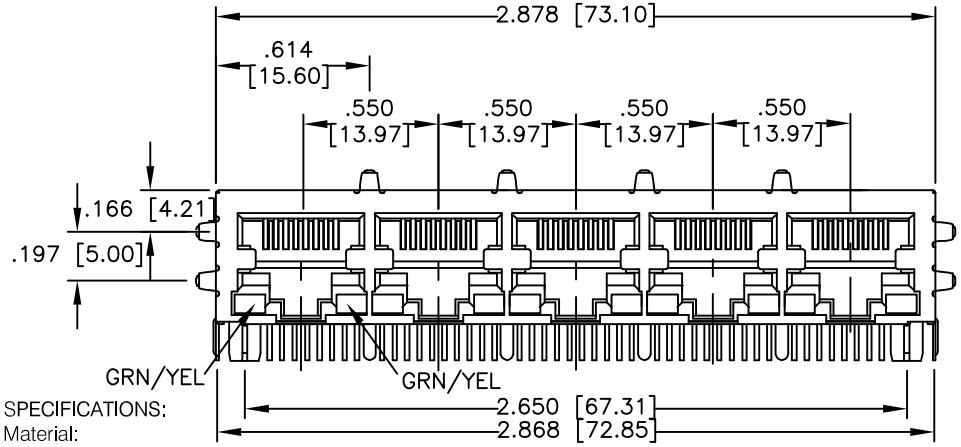

RECOMMENDED PCB LAYOUT

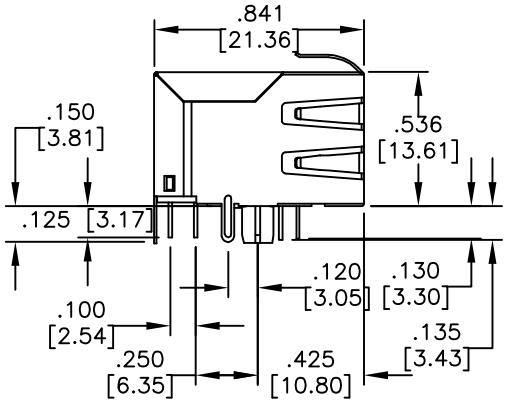

SPECIFICATIONS:

Material:

Insulator: PBT, glass reinforced, rated UL 94V-0

Insulator color: Black

Contacts: Copper Alloy

Shield: Copper Alloy, Nickel plated

Plating:

Gold plating over Nickel underplate on contact area,

Tin over Copper underplate on tails.

(See chart for thickness)

Electrical:

Operating voltage: 125 VAC max

Current rating: 1.5 Amps max

Insulation resistance: 1000 Mohms min @ 500 VDC

Dielectric withstanding voltage: 1000 VAC for 1 minute

Temperature Rating:

Operating temperature: -40°C to +85°C

Environmental:

Lead free, RoHS compliant.

Recommended soldering temp: 235°C for 5 sec.

RoHS COMPLIANT

"X"	PLATING
0	15 uin Gold
1	30 uin Gold
2	50 uin Gold

UNLESS OTHERWISE SPECIFIED
ALL DIMENSIONS ARE MM [INCHES]
TOLERANCES: EXCEPT AS NOTED

INCHES		HOLES	
.X	± .10	Ø.X	±.10
.XX	± .020	Ø.XX	±.015
.XXX	± .015	Ø.XXX	±.010

APPROVALS		DATE
DRAWN	DY	9/08/09
CHECKED		
APPROVED		

ADAM TECH

909 Rahway Avenue, Union, NJ 07083

Phone: 908-687-5000 Fax: 908-687-5710

TITLE

MODULAR JACK GANGED, 5 PORT, 8P8C, R/A W/LED1 GREEN/YELLOW, LED2 GREEN/YELLOW

SIZE	PART NO.	REV.
X	MTJG-5-88TX1-FSD-PG-L16-M62	-

REF: S00005C | SCALE: NTS | SHEET 1 OF 2