Rev	AWO #	Description	Date	Appr
-		RELEASED	4/21/11	

APPROVED: _____

DATE: _____ TITLE:

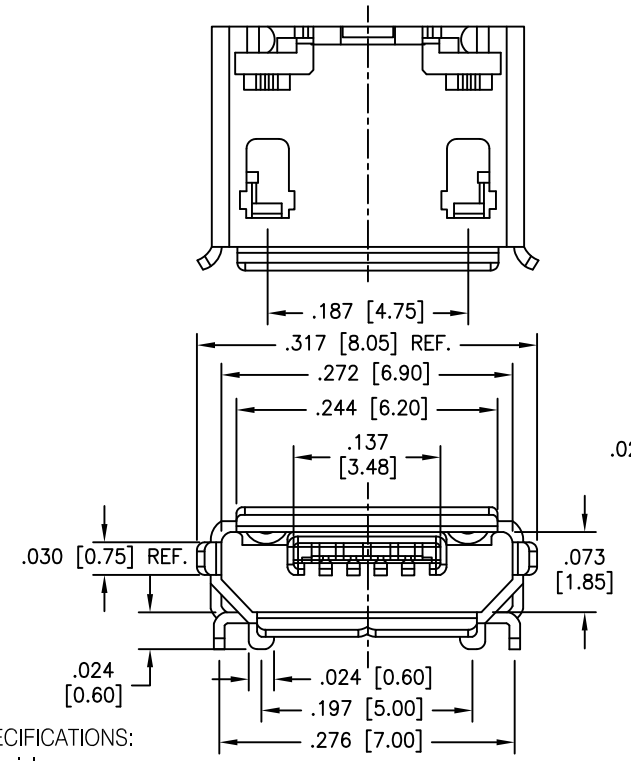

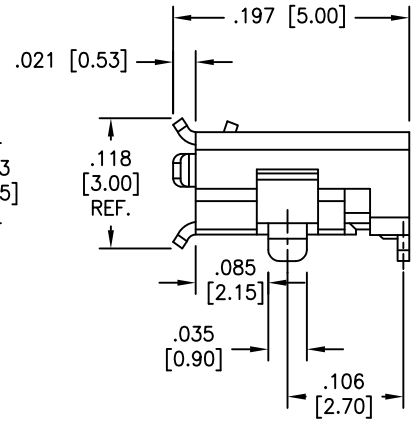

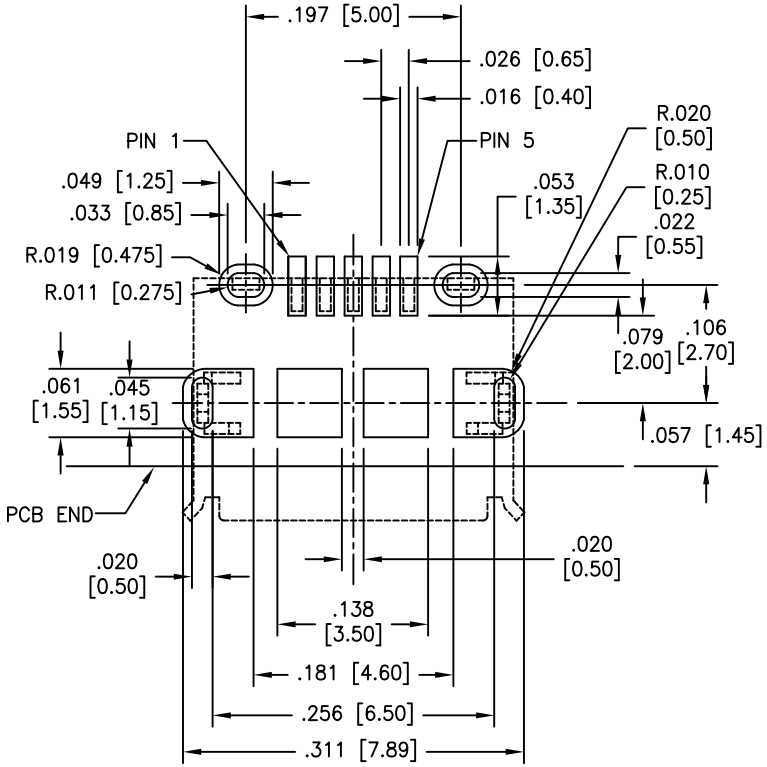

RECOMMENDED PCB LAYOUT

SPECIFICATIONS:

Material:

Insulator: LCP, glass reinforced, rated UL 94V-0

Insulator color: Black

Contacts: Brass

Shell: Brass, Matte Tin plated.

Plating:

Gold Flash over Nickel overall

Electrical:

Operating voltage: 30 VAC max.

Current rating: 1 Amp max.

Contact resistance: 30 mohms max.

Insulation resistance: 1000 Mohms min. @ 100 VDC

Dielectric withstanding voltage: 1000 VAC for 1 minute

Temperature Rating:

Operating temperature: −20°C to +85°C

Packaging:

Supplied on Tape & Reel

Environmental:

Lead free, RoHS compliant.

Recommended soldering temp: 260°C for 5 sec.

RoHS COMPLIANT

UNLESS OTHERWISE SPECIFIED
ALL DIMENSIONS ARE INCHES [MM]
TOLERANCES: EXCEPT AS NOTED

INCHES		HOLES	
.X	± .10	Ø.X	±.10
.XX	± .020	Ø.XX	±.015
.XXX	± .015	Ø.XXX	±.010

APPROVALS		DATE
DRAWN	DY	4/21/11
CHECKED		
APPROVED		

ADAM TECH
909 Rahway Avenue, Union, NJ 07083
Phone: 908-687-5000 Fax: 908-687-5710

TITLE: MICRO USB, TYPE B, SINGLE PORT FEMALE, DIP SHELL, SMT TYPE, TAPE & REEL

SIZE	PART NO.	REV.
X	MCR-B-S-RA-SMT-CS1-T/R	-

REF: S00005C | SCALE: NTS | SHEET 1 OF 1