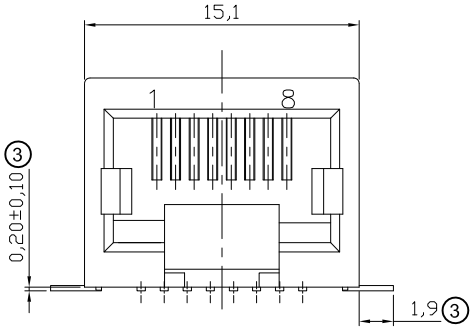

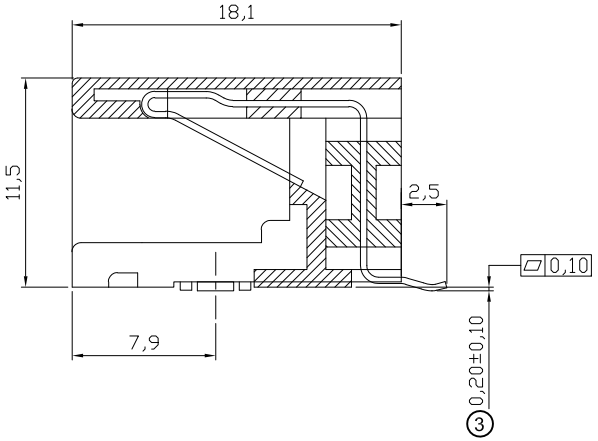

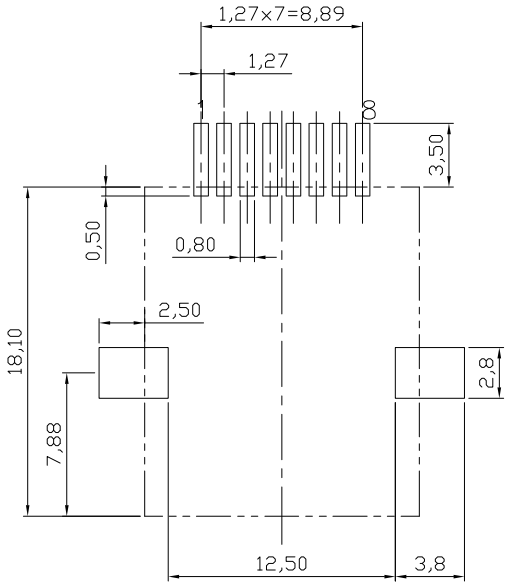

PCB Layout Component Side Shown

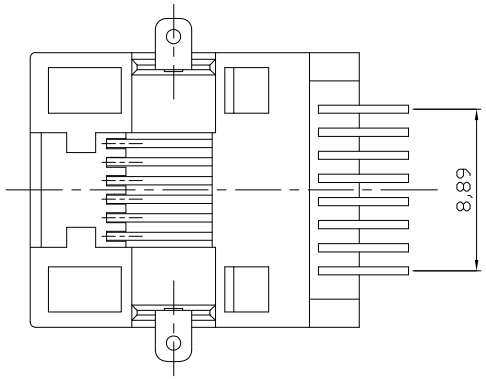

NOTES:
Mechanical:
1. Housing material : PA9T UL94V-0 ,
Color: Black
2. Contact material: Phosphor Bronze t=0.35mm
③ 3. Contact plating: Contact area---6u" Gold plating
Tails---Tin plated all over 50u" Nickel
4. Operating Life: 750 Cycles min.
5. PCB Retention Post-solder: 10 LBS min.
Electrical:
1. Voltage Rating: 125VAC.
2. Current Rating: 1.5AMP.
3. Contact Resistance: 35mΩ max.
4. Insulation Resistance: 1000MΩ min. @ 500 VDC
5. Dielectric Strength: 1000 VAC 60Hz, 1 min.
Environmental:
1. Storage: -40°C To +85°C
2. Operation: -40°C~+85°C
③ 3. IR Reflow Soldering Temp.: 255°C~265°C(5~10S)

Packing: Tape reel

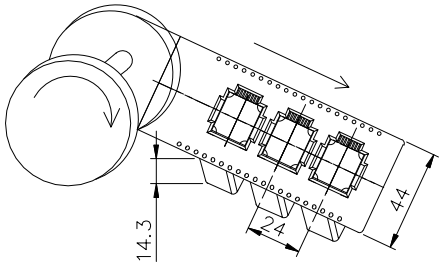

② Qty: 150pcs per reel

RoHS compliant
Unit:mm

File No.: E345352

Scale	Free						Date	Name	Customer-No.
TOLERANCE						Drawn	15.07.2009	Dean	
X.X	±0.20					Approved	27.05.2013	Amy	ASSMANN WSW-No. A-20042-LP/SMT-A
X.XX	±0.15								
X.XXX	±0.10	③	Update	27.05.2013	Amy				Drawing-No. ASS 1050C CO rev03
DIM	TOL	②	Changed the packing quantity	29.10.2010	Rate				
		①	Drawn	15.07.2009	Dean				
Angle	±5°	Id.	Modification	Date	Name				Replace SHEET

ASSMANN WSW components