LT-5™ Fast-Acting Fuse 662 Series

ELECTRICAL CHARACTERISTICS:

% of Ampere Rating	Time
210%	30 minutes, **Max**imum
275%	.010 sec **Min.**; 3 sec **Max**
400%	.003 sec **Min.**; .030 sec **Max**
1000%	.020 sec **Max**imum

AGENCY APPROVALS: IEC 60127-3/1: Semko and VDE approved 50 mA through 3.15 A. Recognized under the Components Program Underwriters Laboratories and recognized by CSA.

INTERRUPTING RATINGS: 35A or 10X rated current; whichever is greater.

PACKAGING:
Please refer to the following suffixes when ordering.
Bulk 100 pieces:
Short Lead (Bulk) HXSL
Long Lead (Bulk) HXLL
Tape and Reel 750 pieces:
Long Lead (Tape and Reel IEC 286-2) ZRLL

PATENTED

ORDERING INFORMATION:

Catalog Number	Ampere Rating	Voltage Rating	Nominal Resistance Cold Ohms	Nominal Melting I²t A² Sec
0662.050	.050	250	4483	0.004
0662.063	.063	250	3865	0.001
0662.080	.080	250	2545	0.001
0662.100	.100	250	2010	0.002
0662.125	.125	250	1345	0.006
0662.160	.160	250	2960	0.014
0662.200	.200	250	2255	0.024
0662.250	.250	250	1460	0.058
0662.315	.315	250	1209	0.104
0662.400	.400	250	180	0.044
0662.500	.500	250	128	0.090
0662.630	.630	250	96	0.150
0662.800	.800	250	78	0.220
0662 001.	1.00	250	60	0.330
0662 1.25	1.25	250	45	0.680
0662 01.6	1.60	250	37	0.940
0662 002.	2.00	250	29	1.330
0662 02.5	2.50	250	24	1.940
0662 3.15	3.15	250	17	5.400
0662 004.	4.00	250	13	7.900
0662 005.	5.00	250	10	11.190

Refer to page 342 for LT-5™ holder information.

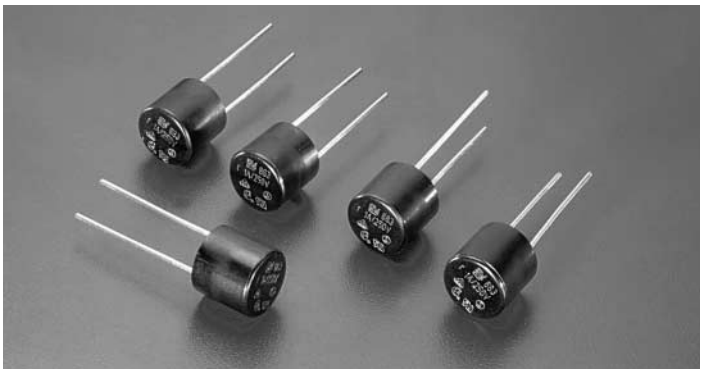

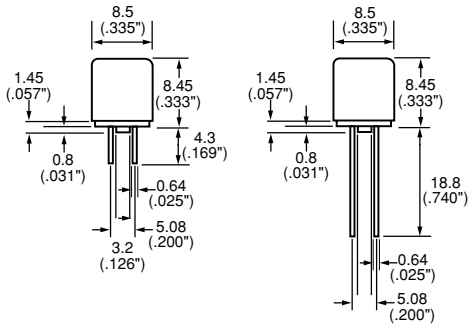
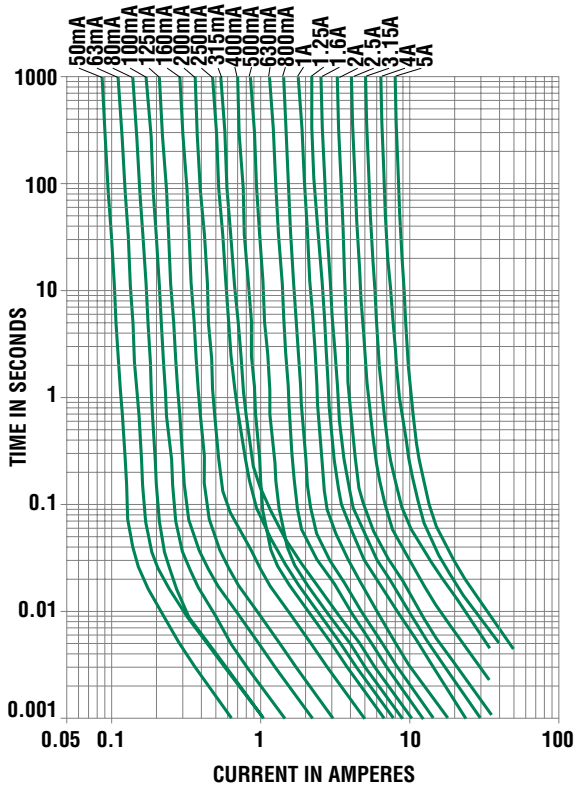
Average Time Current Curves