MICRO SWITCH
a Honeywell Division
FED. MFG. CODE 91929

SWITCH - TOGGLE

CATALOG LISTING
1NT231 SERIES CHART 1

THIS DRAWING COVERS A PROPRIETARY ITEM AND IS THE PROPERTY OF MICRO SWITCH. A DIVISION OF HONEYWELL. THIS DRAWING IS NOT TO BE COPIED OR USED WITHOUT THE APPROVAL OF MICRO SWITCH

CATALOG LISTING	CIRCUIT MADE WITH TOGGLE LEVER IN 4			ELECTRICAL DATA
	KEYWAY SIDE (1-2)	CENTER (1-2)	OPPOSITE KEYWAY (2-3)	
INT231-1	ON	OFF	ON	L191 15A 125, 250, 277 VAC 1/2HP 125 VAC 1HP 250, 277 VAC 5A 125 VAC "L"
INT231-2	OFF	NONE	ON	
INT231-3	ON	NONE	ON	
INT231-21	NONE	OFF	ON	
INT231-31	NONE	ON	ON	
INT231-4	MOM OFF	NONE	ON	L192 10A 125, 250, 277 VAC 1/4HP 125 VAC, 1/2HP 250, 277 VAC 3A 125 VAC "L"
INT231-5	MOM ON	OFF	ON	
INT231-6	MOM ON	NONE	OFF	
INT231-7	MOM ON	OFF	MOM ON	
INT231-8	MOM ON	NONE	ON	
INT231-51	NONE	ON	MOM ON	
INT231-61	MOM ON	OFF	NONE	

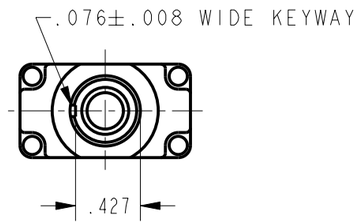

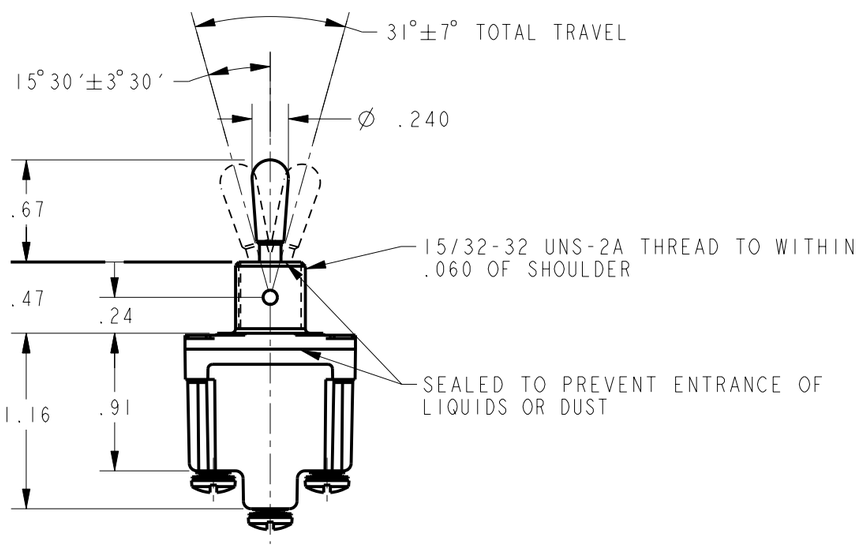

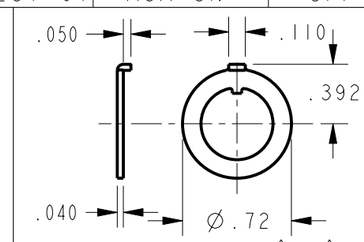

LOCKING RING 3 5

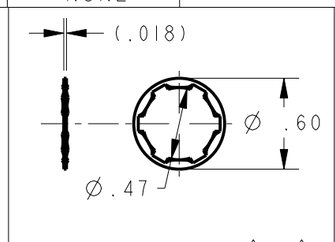

LOCKWASHER 3 5

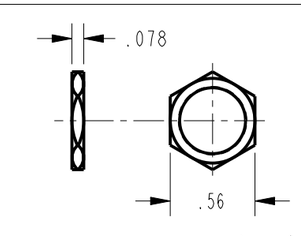

2X HEX NUT 3 5

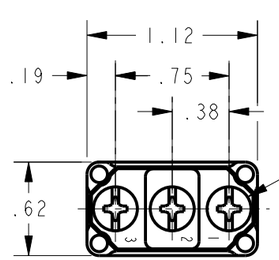

3X 6-32 UNC-2 X (.260) CRES BINDING HEAD, COMBINATION DRIVE TERMINAL SCREW AND LOCKWASHER (SEMS) 3 5

NOTES
1 - SWITCH WILL WITHSTAND TEMPERATURE OF 160°F CONTINUOUSLY AT FULL RATED LOAD
2 - MICRO SWITCH CAT. LIST. MARKED ON SIDE OF SWITCH
3 - FURNISHED UNASSEMBLED
4 - APPLIES ONLY TO "ON" AND "MOMENTARY ON" POSITIONS
5 - NH SUFFIX MUST BE ADDED TO SPECIFY NO HARDWARE (EX INT1-1-NH)

THIRD ANGLE PROJECTION

SCALE FULL

DO NOT SCALE PRINT

UNLESS OTHERWISE SPECIFIED TOLERANCES ARE

ONE PLACE	(.0)	±.030
TWO PLACE	(.00)	±.015
THREE PLACE	(.000)	±.005
ANGLES		±

WEIGHT .07 LB APPROX

ANSI Y14.5M-1982 APPLIES

CATALOG LISTING 1NT231 SERIES CHART 1
PAGE 1 OF 1
RELEASE NO. PR-24251
REPLACES -
ISSUE 2
REVISIONS
A 207782 CSL 27 MAR 03
CHECK
CHECK 29OCT99
CHECK SAV
CHECK 29OCT99
DRAWN TSM
PTC/CAD 2D