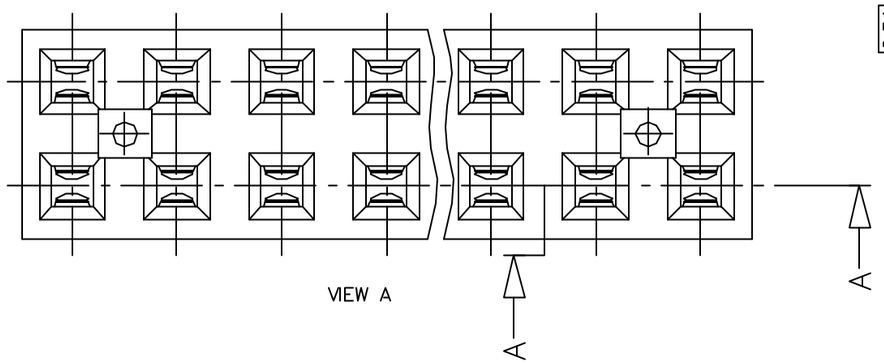

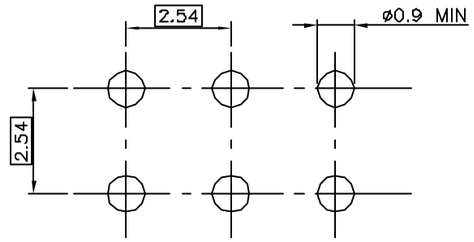

RECOMMENDED HOLE PATERN

PRODUCT NUMBER	NUMBER OF POS.	DIM"C"	DIM"D"
71998–Y02(H)(LF)	2 x 02	2.54	5.00
71998–Y03(H)(LF)	2 x 03	5.08	7.54
71998–Y04(H)(LF)	2 x 04	7.62	10.08
71998–Y05(H)(LF)	2 x 05	10.16	12.62
71998–Y06(H)(LF)	2 x 06	12.70	15.16
71998–Y07(H)(LF)	2 x 07	15.24	17.70
71998–Y08(H)(LF)	2 x 08	17.78	20.24
71998–Y09(H)(LF)	2 x 09	20.32	22.78
71998–Y10(H)(LF)	2 x 10	22.86	25.32
71998–Y13(H)(LF)	2 x 13	30.48	32.94

WHEN NEEDED, SUFFIX LETTER "LF" INDICATES THE PRODUCT IS RoHS COMPATIBLE, SEE NOTE 4

WHEN NEEDED, SUFFIX LETTER "H" INDICATES IT'S A HIGH TEMPERATURE PRODUCT SEE NOTE 2

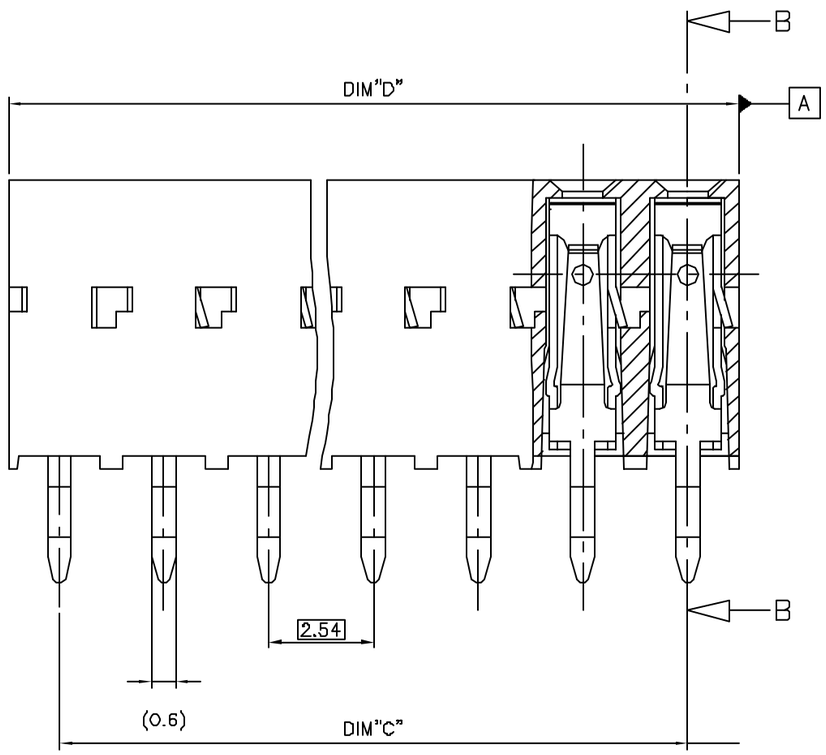

SECTION A–A

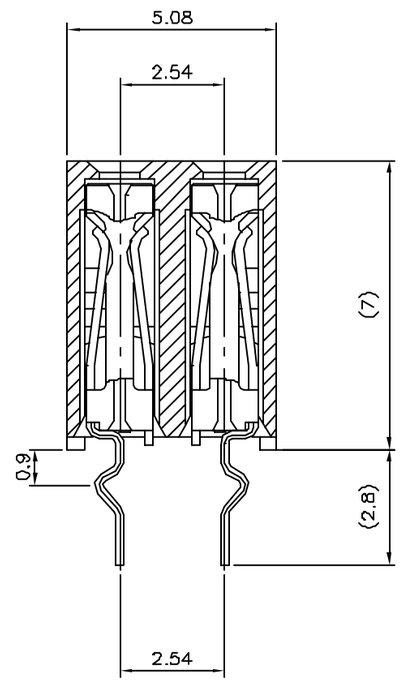

SECTION B–B

NOTES:

1 – MATERIAL HOUSING: THERMOPLASTIC POLYESTER 30% GLASS FILLED, COLOUR BLUE. FLAME RETARDANT PER UL–94 CATEGORY V0.

2 – MATERIAL HOUSING: HIGH TEMPERATURE THERMOPLASTIC 30% GLASS FILLED, COLOUR GREY. FLAME RETARDANT PER UL–94 CATEGORY V0.

3 – MATERIAL TERMINAL: PHOSPHOR BRONZE EXTRA HARD.

4 – RoHS COMPATIBLE PRODUCT SPECIFICATIONS

a – PLATING:
– "LF" MEANS THE PRODUCT IS LEAD–FREE, 2µm MINIMUM MATTE TIN OVER 1.27µm MINIMUM NICKEL UNDERPLATE.

b – MANUFACTURING PROCESS COMPATIBILITY
– THE HOUSING WILL WITHSTAND EXPOSURE TO 260°C ±5°C SOLDER BATH TEMPERATURE FOR 5 SECONDS IN A WAVE SOLDER APPLICATION WITH A 1.6mm MIN THICK CIRCUIT BOARD.

c – LABELING:
– MEETS PACKAGING SPECS AS PER GS–14–920

d – LEGAL STATEMENT: SEE GS–22–008

71998–4XX(H)LF	5µm Sn	Sn
71998–3XX(H)LF	0.76 µm GOLD	Sn
71998–4XX(H)	5µm SnPb	SnPb
71998–3XX(H)	0.76 µm GOLD	SnPb
PLATING CODE	CONTACT AREA	SOLDER TAIL
	PLATING THICKNESS OVER 1.27µm Ni	

mat'l. code SEE NOTES				surface ISO 1302	tolerance ISO 406 ISO 1101	projection	product family DX VCC DR
Ltr	ecn no	dr	date	tolerances unless otherwise specified			title
B	F40194	DLE	94.03.08	angles	linear ±0.3		KINKED LEGS
C	F04–0347	DLE	04.11.17			mm	
D	F06–0234	DLE	06.08.24	±2°		scale 10:1	
E	F08–0137	DLE	08.02.27	dr D LEGRAND		D4.11.17	dwg no 71998 sheet 1 of 1 size A2
F	F08–0204	DLE	08.08.20	engr P NIZZI		04.11.17	
G	F07–0198	DLE	07.06.31	chr D LEGRAND		D4.11.17	
H	F07–0271	LMU	07.12.06	appd P NZ		D4.11.17	type CUSTOMER Drawing
sheet index	revision sheet						

Copyright FCI
FCIconnect.com
Form: A2
R:\Mb\Public\Engineering\Product\ELX\f07-0271\71998c01.dwg

PDM: Rev:H STATUS:Released Printed: Jun 06, 2009