Fiber Optic Bulkhead Adapter 630-015

Glenair®

See Page E-20 for Assembly Procedure

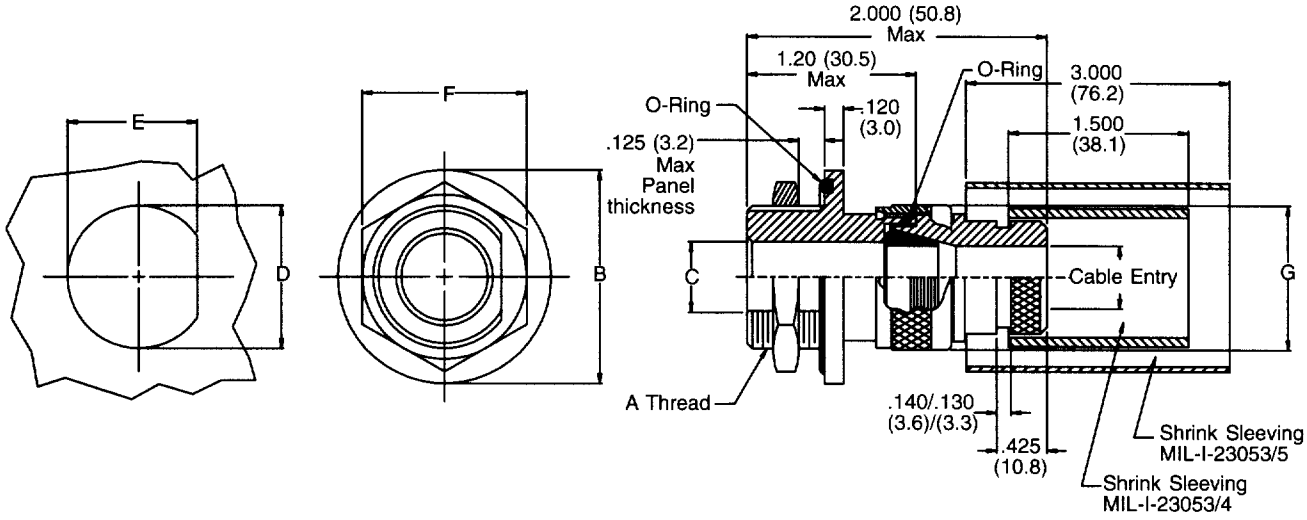

TABLE II: FINISH

Symbol	Finish Description
B	Cadmium Plate/Olive Drab
M	Electroless Nickel
N	Cadmium Plate/Olive Drab over Nickel
NF	Cadmium/Olive Drab over Electroless Nickel (500 Hour Salt Spray)

630-015 NF-01

- Product Series
- Basic Number
- Finish (Table II)
- Dash No. (Table I)

TABLE I: SHELL SIZE

Dash No	A Thread Class 2A	B Max	C +.010 (0.3) -.000 (0.0)	D +.010 (0.3) -.000 (0.0)	E +.010 (0.3) -.000 (0.0)	F Max	G Max	Max Cable Entry	MIL-I-23053 Shrink Sleeve	MIL-I-23053 Shrink Sleeve
01	3/4 -20 UNEF	1.140 (29.0)	.340 (8.6)	.755 (19.2)	.691 (17.6)	.938 (23.8)	1.004 (25.5)	.335 (8.5)	/4-204-0	/5-109-0
02	3/4 -20 UNEF	1.140 (29.0)	.460 (11.7)	.755 (19.2)	.691 (17.6)	.938 (23.8)	1.132 (28.8)	.455 (11.6)	/4-204-0	/5-109-0
03	7/8 -20 UNEF	1.280 (32.5)	.630 (16.0)	.880 (22.4)	.861 (21.9)	1.062 (27.0)	1.343 (34.1)	.625 (15.9)	/4-205-0	/5-110--0
04	1 1/16-18 UNEF	1.490 (37.8)	.755 (19.2)	1.067 (27.1)	1.004 (25.5)	1.250 (31.8)	1.468 (37.3)	.750 (19.1)	/4-206-0	/5-110-0
05	1 3/16-18 UNEF	1.640 (41.7)	.880 (22.4)	1.192 (30.3)	1.130 (28.7)	1.375 (34.9)	1.593 (40.5)	.875 (22.2)	/4-206-0	/5-111-0
06	1/5/16-18 UNEF	1.930 (49.0)	1.005 (25.5)	1.317 (33.5)	1.254 (31.9)	1.625 (41.3)	1.656 (42.1)	1.000 (25.4)	/4-205-0	/5-111-0

Metric dimensions (mm) are in parentheses and are for reference only.

© 2002 Glenair, Inc. CAGE Codes 06324 Printed in U.S.A.