DATE	SYM	REVISION RECORD	AUTH.	DR.	CK.
6/2/00	-	ISSUED		NT	DG

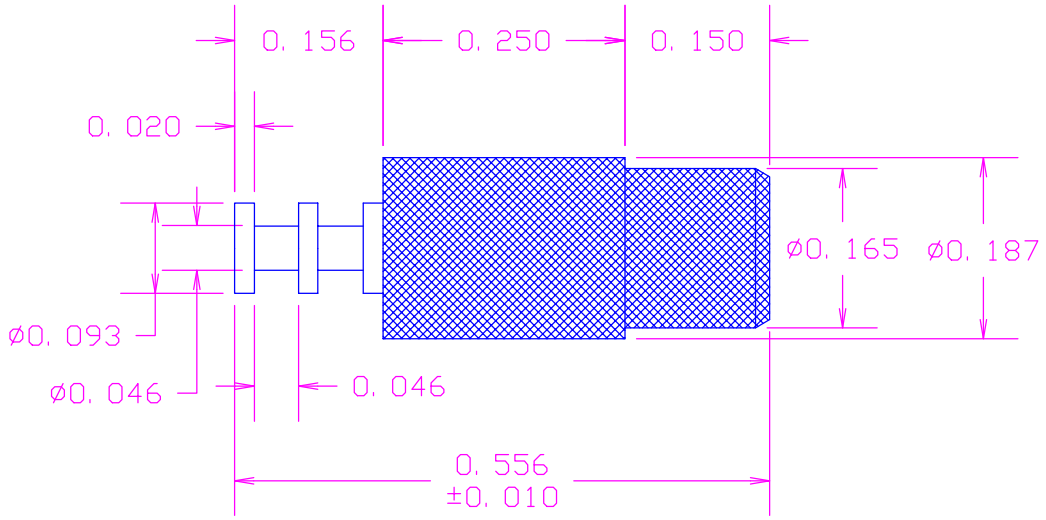

RECOMMENDED HOLE SIZE
FOR PRESS FIT INSERTION

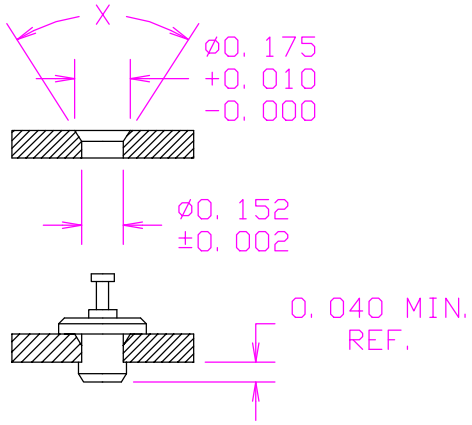

FOR BOARD THICKNESS GREATER THAN . 040, X=60°

FOR BOARD THICKNESS LESS THAN . 040, X=80°

ACTUAL SIZE

MATERIAL: PIN– BRASS, PER ASTM B16,
ALLOY C 36000, 1/2 HARD

BUSHING– PTFE PER ASTM D1710
COLOR–SEE COLOR CODE

FINISH: PIN– .0003"MIN. ELECTRO–SOLDER PER
MIL–P–81728, OVER .0001"MIN. COPPER

(XX)COLOR CODE:
10-BLACK
11-BROWN
12-RED
13-ORANGE
14-YELLOW
15-GEEN
16-BLUE
17-VIOLET
18-GRAY
19-WHITE(STANDARD)

TOLERANCES	CONCORD ELECTRONICS CORPORATION		
DECIMAL ± .005	P/N	SCALE	30 GREAT JONES ST. NEW YORK N. Y. 10012
FRACTIONAL ± 1/64	TITLE TERMINAL		
± 5°	DATE	DRAWING NUMBER 1102–34–05XX	