DIMENSIONS mm (inches)

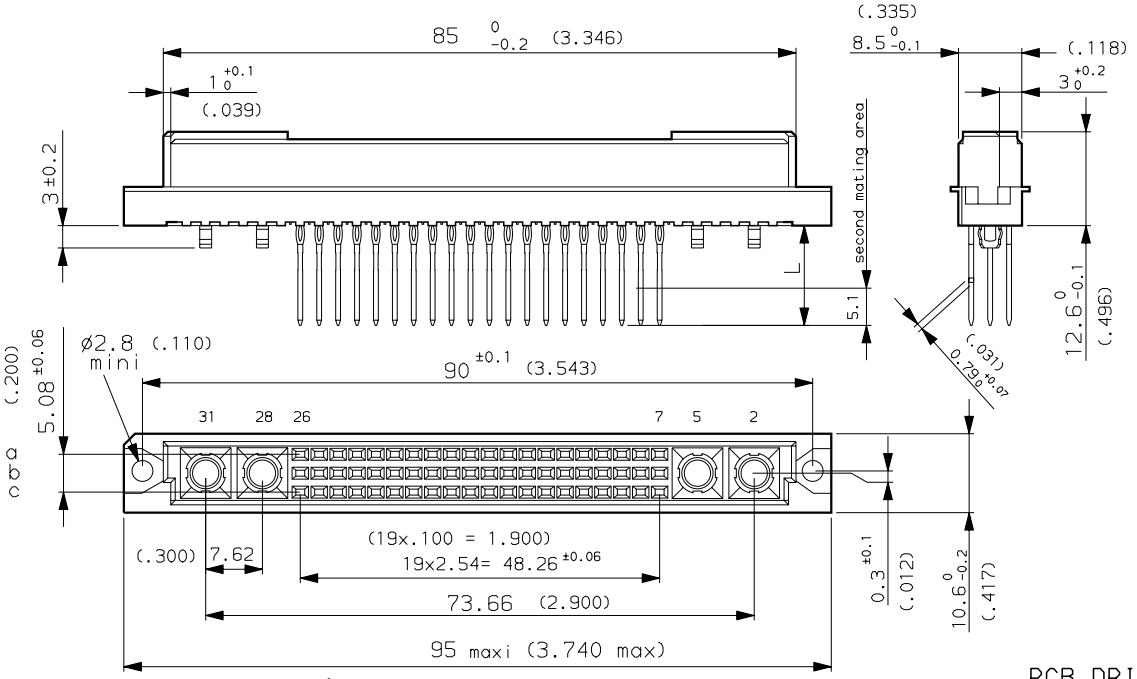

METHOD OF INSERTION
ON THE PCB = FLAT ROCK

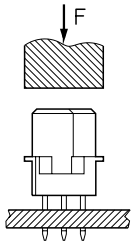

ELECTRICAL DATA (for signal contacts)

-Current at AMB.	1.5 A at 20° C / 1 A at 70° C
-I max	2A
-Contact resistance	≤20mΩ according to DIN 41640 Teil 4 test 2a
-Insulation resistance	≥10^6MΩ according to DIN 41640 teil 7 test 3a
-TEST VOLTAGE	according to DIN 41640 teil 21
contact/contact	1000V eff (0.5 mA / 50 Hz)
contact/ground	1550V eff (0.5 mA / 50 Hz)
-Press Fit termination resistance	≤ 1 mΩ

MECHANICAL DATA (for signal contacts)

-Mating force		60 Cts : ≤56N (12.65 lb) / 40 Cts : ≤38N (8.6 lb)
-Unmating force		60 Cts : ≥9N (2.05 lb) / 40 Cts : ≥6N (1.35 lb)
-Mechanical endurance	class 1	500 matings unmatings according to DIN41640 teil 21
	class 2	400 " " "
	class 3	50 " " "
-Press in insertion force per pin		180 N (40.7 lb) max / 75 N (17 lb) standard
-Material insulator		Polyester thermoplastic UL94V0
-Material contacts		Phosphor bronze
-Finishing contact surface		Gold over Nickel
-Finishing termination		Tin Lead and Gold over Nickel
-Shock		≤40mg according to DIN 41640 Teil 14 test 6c
-Vibration	class 1	10-2000Hz/20g according to DIN 41640 Teil 15
	class 2	10-500Hz/5g " "
-Backpanel or PCB thickness:		1.6 , 2,4 or 3,2 mm

ENVIRONMENTAL DATA

-Climatic category	According to DIN 41612
-Corrosion	According to DIN 41612

PCB DRILLING
component side

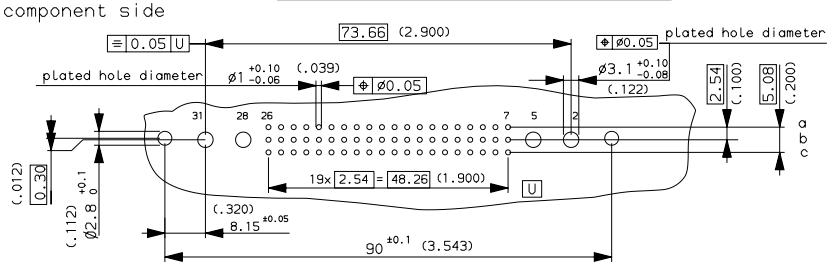

PERFORMANCES AS PER DIN 41612

PART NUMBER	8609-□□-DP-□7□5-000-A
PIN OUT	
rows a-b-c	3 — 60
rows a-c	4 — 40
NUMBER OF CONTACTS	
TERMINATION	
L = 13.10 ±0.20(.515)	rear plug up — 96
L = 17.10 ±0.20(.673)	rear plug up + 1 wrap — 97
PERFORMANCE CLASS	
DIN 41612 class 3	4
DIN 41612 class 2	5
DIN 41612 class 1	6

ISS	DATE	Latest modification by : ROUILLARD	MOD N°
b	05/11/97	Update : modification contacts and insulator --	--

Designed by: ROUILLARD date 27/01/97 Type of drawing: CLIENT

TITLE : STRAIGHT FEMALE - STYLE M
PRESS FIT REAR PLUG UP

SCALE: 1.5 SHEET 1/1

FCI FRAMATOME GROUP
FRAMATOME CONNECTORS FRANCE
Rue Louis Breguet - BP 05
72024 LE MANS Cedex
Tel. 33 (16) 43.84.08.43

This document is the property of FRAMATOME CONNECTORS FRANCE
It must not be reproduced or communicated without permission in writing from the owners

FORMAT A3 | SOURIAU DRG N° C-8609-0552 | PROJECT D90D001