THIS DRAWING IS UNPUBLISHED. RELEASED FOR PUBLICATION -.- .
© COPYRIGHT - BY TYCO ELECTRONICS CORPORATION. ALL RIGHTS RESERVED.

LOC	DIST
AD	00

REVISIONS

P	LTR	DESCRIPTION	DATE	DWN	APVD
	P	EC 0G3C 0218 05	28APR05	BSV	JLG

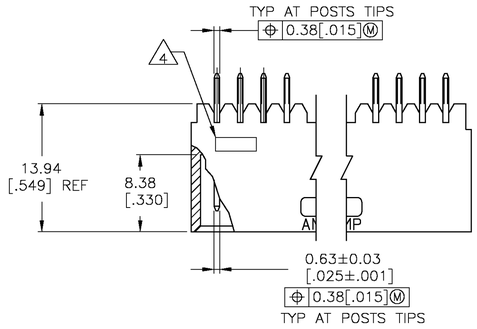

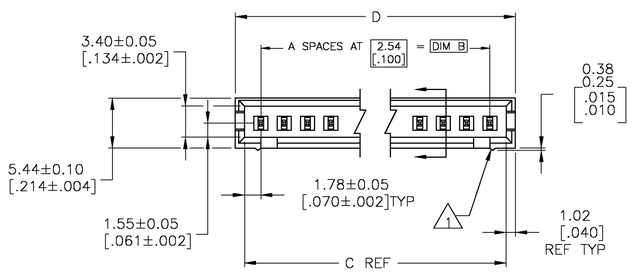

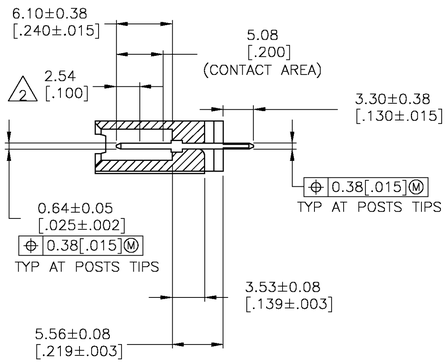

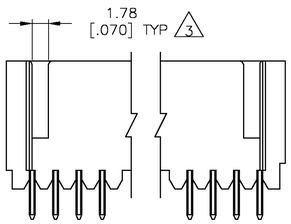

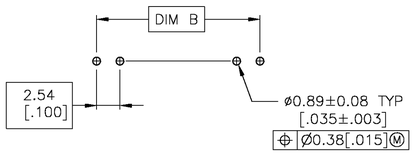

RECOMMENDED HOLE LAYOUT

1. STANDOFFS: UP TO 9 POS–(2 REQD) ON THE OUTSIDE ENDS OF THE HOUSING
   10 TO 19 POS–(3 REQD) TWO ON THE OUTSIDE ENDS AND ONE CENTERED ON THE HOUSING
   19 POS AND LARGER–(4 REQD) TWO ON THE OUTSIDE ENDS AND TWO SPACED EVENLY WITHIN THE REMAINING LENGTH OF THE HOUSING
2. POINT OF MEASUREMENT FOR PLATING THICKNESS
3. FOR 3 POS (3––4 ONLY) ONE SLOT, 5.46[.215] WIDE.
4. RECESSED DATE CODE
5. HOUSING: FLAME RETARDANT THERMOPLASTIC, COLOR – BLACK.
   POSTS: BRASS.
6. 0.00038[.000015] GOLD ON THE CONTACT AREA, 0.00254[.000100]–0.00508[.000200] MATTE TIN–LEAD ON THE SOLDER TAIL ALL OVER 0.00127[.000050] NICKEL.
7. 0.00038[.000015] GOLD ON THE CONTACT AREA, 0.00254[.000100]–0.00508[.000200] MATTE TIN ON THE SOLDER TAIL ALL OVER 0.00127[.000050] NICKEL.

3	7	10.67 [.420]	8.64 [.340]	5.08 [.200]	2	3	8–102202–4
	7	66.55 [2.620]	64.52 [2.540]	60.96 [2.400]	24	25	7–102202–2
	7	64.01 [2.520]	61.98 [2.440]	58.42 [2.300]	23	24	7–102202–1
	7	61.47 [2.420]	59.44 [2.340]	55.88 [2.200]	22	23	7–102202–0
	7	58.93 [2.320]	56.90 [2.240]	53.34 [2.100]	21	22	6–102202–9
	7	56.39 [2.220]	54.36 [2.140]	50.80 [2.000]	20	21	6–102202–8
	7	53.85 [2.120]	51.82 [2.040]	48.26 [1.900]	19	20	6–102202–7
	7	51.31 [2.020]	49.28 [1.940]	45.72 [1.800]	18	19	6–102202–6
	7	48.77 [1.920]	46.74 [1.840]	43.18 [1.700]	17	18	6–102202–5
	7	46.23 [1.820]	44.20 [1.740]	40.64 [1.600]	16	17	6–102202–4
	7	43.69 [1.720]	41.66 [1.640]	38.10 [1.500]	15	16	6–102202–3
	7	41.15 [1.620]	39.12 [1.540]	35.56 [1.400]	14	15	6–102202–2
	7	38.61 [1.520]	36.58 [1.440]	33.02 [1.300]	13	14	6–102202–1
	7	36.07 [1.420]	34.04 [1.340]	30.48 [1.200]	12	13	6–102202–0
	7	33.53 [1.320]	31.50 [1.240]	27.94 [1.100]	11	12	5–102202–9
	7	30.99 [1.220]	28.96 [1.140]	25.40 [1.000]	10	11	5–102202–8
	7	28.45 [1.120]	26.42 [1.040]	22.86 [.900]	9	10	5–102202–7
	7	25.91 [1.020]	23.88 [.940]	20.32 [.800]	8	9	5–102202–6
	7	23.37 [.920]	21.34 [.840]	17.78 [.700]	7	8	5–102202–5
	7	20.83 [.820]	18.80 [.740]	15.24 [.600]	6	7	5–102202–4
	7	18.29 [.720]	16.26 [.640]	12.70 [.500]	5	6	5–102202–3
	7	15.75 [.620]	13.72 [.540]	10.16 [.400]	4	5	5–102202–2
	7	13.21 [.520]	11.18 [.440]	7.62 [.300]	3	4	5–102202–1
3	6	10.67 [.420]	8.64 [.340]	5.08 [.200]	2	3	3–102202–4
OBSOLETE	6	94.49 [3.720]	92.46 [3.640]	88.90 [3.500]	35	36	3–102202–3
OBSOLETE	6	91.95 [3.620]	89.92 [3.540]	86.36 [3.400]	34	35	3–102202–2
OBSOLETE	6	89.41 [3.520]	87.38 [3.440]	83.82 [3.300]	33	34	3–102202–1
OBSOLETE	6	86.87 [3.420]	84.84 [3.340]	81.28 [3.200]	32	33	3–102202–0
OBSOLETE	6	84.33 [3.320]	82.30 [3.240]	78.74 [3.100]	31	32	2–102202–9
OBSOLETE	6	81.79 [3.220]	79.76 [3.140]	76.20 [3.000]	30	31	2–102202–8
OBSOLETE	6	79.25 [3.120]	77.22 [3.040]	73.66 [2.900]	29	30	2–102202–7
OBSOLETE	6	76.71 [3.020]	74.68 [2.940]	71.12 [2.800]	28	29	2–102202–6
OBSOLETE	6	74.17 [2.920]	72.14 [2.840]	68.58 [2.700]	27	28	2–102202–5
OBSOLETE	6	71.63 [2.820]	69.60 [2.740]	66.04 [2.600]	26	27	2–102202–4
OBSOLETE	6	69.09 [2.720]	67.06 [2.640]	63.50 [2.500]	25	26	2–102202–3
	6	66.55 [2.620]	64.52 [2.540]	60.96 [2.400]	24	25	2–102202–2
	6	64.01 [2.520]	61.98 [2.440]	58.42 [2.300]	23	24	2–102202–1
	6	61.47 [2.420]	59.44 [2.340]	55.88 [2.200]	22	23	2–102202–0
	6	58.93 [2.320]	56.90 [2.240]	53.34 [2.100]	21	22	1–102202–9
	6	56.39 [2.220]	54.36 [2.140]	50.80 [2.000]	20	21	1–102202–8
	6	53.85 [2.120]	51.82 [2.040]	48.26 [1.900]	19	20	1–102202–7
	6	51.31 [2.020]	49.28 [1.940]	45.72 [1.800]	18	19	1–102202–6
	6	48.77 [1.920]	46.74 [1.840]	43.18 [1.700]	17	18	1–102202–5
	6	46.23 [1.820]	44.20 [1.740]	40.64 [1.600]	16	17	1–102202–4
	6	43.69 [1.720]	41.66 [1.640]	38.10 [1.500]	15	16	1–102202–3
	6	41.15 [1.620]	39.12 [1.540]	35.56 [1.400]	14	15	1–102202–2
	6	38.61 [1.520]	36.58 [1.440]	33.02 [1.300]	13	14	1–102202–1
	6	36.07 [1.420]	34.04 [1.340]	30.48 [1.200]	12	13	1–102202–0
	6	33.53 [1.320]	31.50 [1.240]	27.94 [1.100]	11	12	102202–9
	6	30.99 [1.220]	28.96 [1.140]	25.40 [1.000]	10	11	102202–8
	6	28.45 [1.120]	26.42 [1.040]	22.86 [.900]	9	10	102202–7
	6	25.91 [1.020]	23.88 [.940]	20.32 [.800]	8	9	102202–6
	6	23.37 [.920]	21.34 [.840]	17.78 [.700]	7	8	102202–5
	6	20.83 [.820]	18.80 [.740]	15.24 [.600]	6	7	102202–4
	6	18.29 [.720]	16.26 [.640]	12.70 [.500]	5	6	102202–3
	6	15.75 [.620]	13.72 [.540]	10.16 [.400]	4	5	102202–2
	6	13.21 [.520]	11.18 [.440]	7.62 [.300]	3	4	102202–1
PLATING	D	C	B	A	NO OF POSN	PART NUMBER	

THIS DRAWING IS A CONTROLLED DOCUMENT.

DIMENSIONS: mm [INCHES]

TOLERANCES UNLESS OTHERWISE SPECIFIED:
0 PLC ± –
1 PLC ± –
2 PLC ± –
3 PLC ± 0.38 [.015]
4 PLC ± –
ANGLES ± –

MATERIAL 5
FINISH SEE TABLE

DWN 04NOV97 E. BRANDBERG
CHK – –
APVD 04NOV97 S. SHUEY
PRODUCT SPEC –
APPLICATION SPEC –
WEIGHT –

Tyco Electronics Corporation
Harrisburg, Pa 17105–3608

NAME ASSEMBLY, MOD II, HEADER, SINGLE ROW, 2.54 [.100] C/L, VERTICAL, WITH 0.64 [.025] SQUARE POSTS

SIZE A1 | CAGE CODE 00779 | DRAWING NO C–102202 | RESTRICTED TO –

CUSTOMER DRAWING | SCALE 3:1 | SHEET 1 OF 1 | REV P