PRODUCT NUMBER

5 3 6 3 0 - X X X - X X X

PLATING
G=30μ"[0.76μm]GOLD ON CONTACT AREA
150μ"[3.81μm]TIN/LEAD ON TAIL

POLARIZATION NOTE 8

TAIL LENGTH
2 = .120 [3.05]
3 = .160 [4.06]
6 = .610 [15.49]
8 = .733 [18.62]

DASH NO.	POSITIONS	HEADER STYLE
10	2 X 5	A
14	2 X 7	C
16	2 X 8	D
20	2 X 10	D
26	2 X 13	D
34	2 X 17	D
40	2 X 20	D
50	2 X 25	D

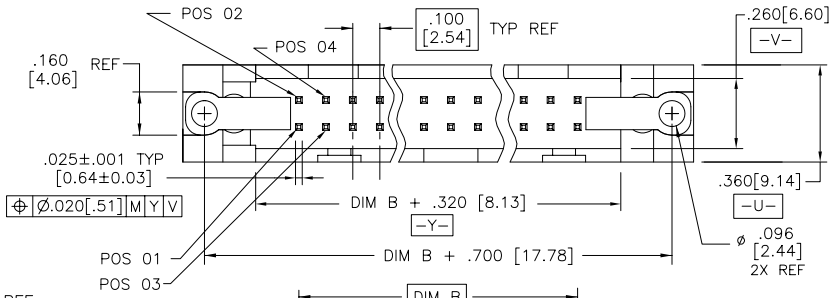

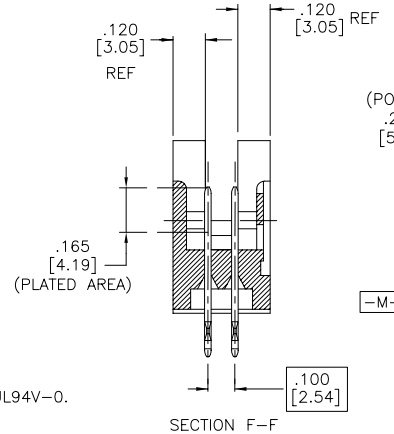

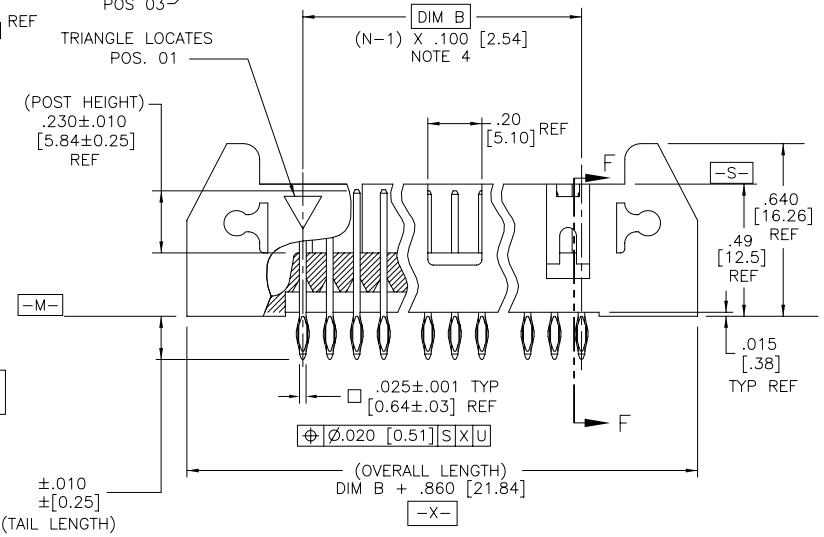

NOTES:

1. HOUSING MAT'L: HIGH TEMPERTURE THERMOPLASTIC. UL94V-0. COLOR : BLACK
2. PIN MATERIAL: PHOSPHOR-BRONZE
3. 3 LBS/1.36 KG MIN. RETENTION.
4. TO DETERMINE DIMENSIONS: N = NUMBER OF POSITIONS. EXAMPLE: 10 POS., (N-1) x .100[2.54]=.900[22.87]
5. PACKAGED PER BUS-14-312 IN TRAYS.
6. UNDERPLATING: 50μ"/1.27μm Ni.
7. FOR POLARIZATION, SPECIFY POSITION NUMBER (i.e.. 03= PIN 3) TO OMIT PIN. OMIT FROM PRODUCT NUMBER IF THIS FEATURE IS NOT APPLICABLE.
8. RECOMMENDED PLATED-THRU-HOLE DIMENSIONS ARE: DRILLED HOLE: .0453/1.604±.0010/.025 DIA COPPER PLATING THICKNESS .001/.025 TO .003/.076 SOLDER PLATING THICKNESS: .0003/.076 TO .0007/.0178 OVERALL HOLE SIZE: .040/1.016±.003/.076 DIA
9. RECOMMENDED MOUNTING SCREW - #2-56 FILLISTER HEAD MACHINE SCREW .25/6.35 LONG FOR .063/1.58 & .094/2.38 BOARDS, .313/7.93 LONG FOR .125/3.18 BOARDS.

HEADER STYLE (LATCHES NOT SHOWN)

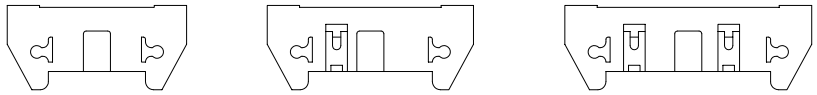

2x5 STYLE A | 2x7 STYLE C | 2 X 8 & LARGER STYLE D

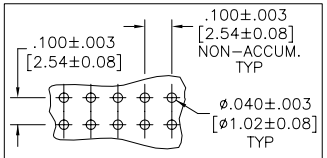

RECOMMENDED HOLE PATTERN

mat'l. code				surface ISO 1302	tolerance ISO 406 ISO 1101		projection	product family QUICKIE
ltr	ecn no	dr	date	tolerances unless otherwise specified				title
A	V02362	AZ	9/27/00	angles	linear	.XX±.01/.3	INCH/MM	.100/2.54cc EJECT LATCH
B	M06-0289	AGS	7/29/06			.XXX±.005/.13		SHOROUDED VERTICAL P.F HEADER
				0°±2°		.XXXX±.0020/.051	scale 1:1	
				dr	A. ZEREBILOV	9/27/00	FCI	dwg no 53630 sheet 1 of 1 size A3
				engr	M. MOSTOLLER	9/27/00		
				chr	M. MOSTOLLER	9/27/00		
				appd	M. MOSTOLLER	9/27/00		type Product Customer Drawing
sheet index	revision sheet	B 1						

form: A3

FCIconnect.com
Copyright FCI

PDM: Rev:B STATUS:Released Printed: Apr 12, 2011