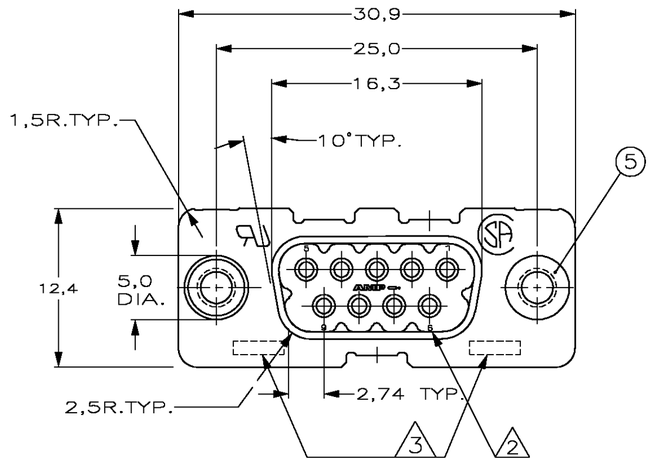

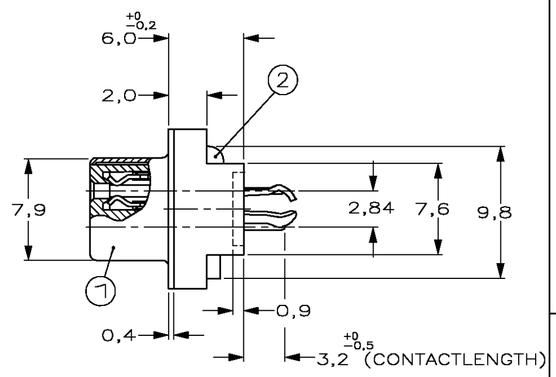

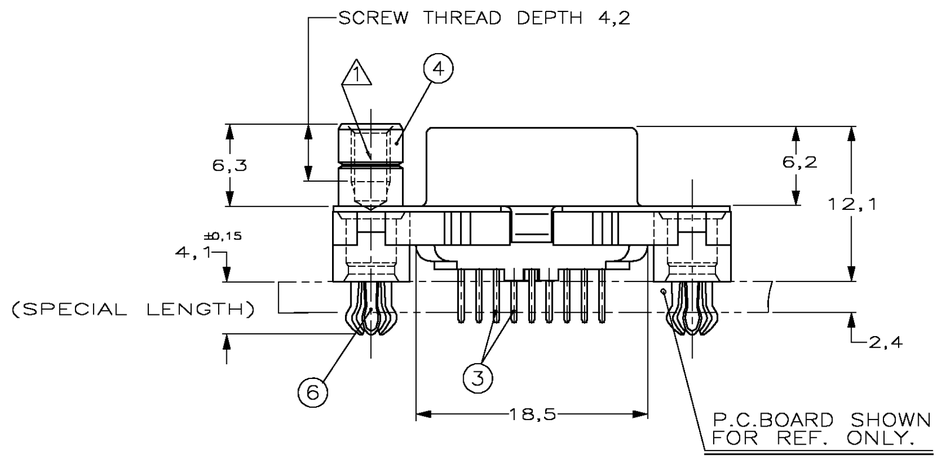

RECOMMENDED P.C. BOARD HOLE-LAYOUT

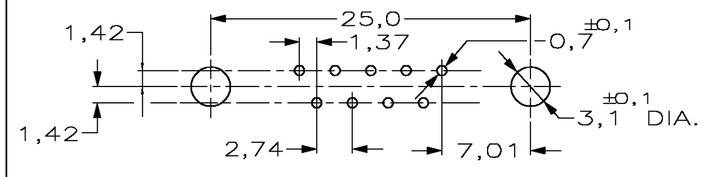

DO NOT SCALE | METRIC | THIRD ANGLE PROJECTION

ACCESSORIES PREFIX "Z"

ITEM NR.	DESCRIPTION OF ACCESSORY	1	2	3	4	5	6	7	8	9	10
–	–										
5	BUSHING WITH THREAD 4-40 UNC		2								
5	BUSHING WITH THREAD M3			2							
4	FEMALE SCREWLOCK WITH THREAD 4-40 UNC				2						
4	FEMALE SCREWLOCK WITH THREAD M3					2					
6	BOARDLOCK		2	2	2	2					

HOW TO ORDER:

9 POS.-----> Z-1230042-Y

PREFIX FOR ACCESSORIES

BASIC PARTNR.

SUFFIX FOR PLATING

	1	2	3	4	5	6	7	8	9	10
	1-XXXXX-Y	2-XXXXX-Y	3-XXXXX-Y	4-XXXXX-Y						

PLATING SUFFIX "Y"

GOLD OVER NICKEL AS PER PERFORMANCE LEVEL 2 (DIN 41652)
SOLDER-PART :2,5µm BRIGHT TIN.
} -Y = -2

1 GROOVE INDICATES VERSION WITH 4-40 UNC INNER THREAD; WITHOUT GROOVE INDICATES VERSION WITH M3 INNER THREAD.

2 CAVITY IDENTIFICATION AT FRONT SIDE ONLY.

3 PARTNUMBER AND DATE CODE.

4 CONNECTOR CAN BE USED FOR PCB THICKNESS OF 2,4mm ONLY.

ITEM NRS./MATERIAL :

1	SHELL	: BRIGHT TINPLATED STEEL
2	HOUSING	: GLASSFILLED POLYESTER, COLOR : BLACK
3	CONTACTS	: PHOSPHORBRONZE (PLATING : SEE TABLE ABOVE)
4	FEMALE SCREWLOCK	: TINPLATED STEEL (INNER THREAD 4-40 UNC OR M3)
5	BUSHING	: TINPLATED STEEL (INNER THREAD 4-40 UNC OR M3)
6	BOARDLOCK	: TINPLATED PHOSPHORBRONZE

LTR.	REVISION RECORD	DR.	CHK.	DATE
–	–	-	-	-
–	–	-	-	-
–	–	-	-	-
D	EH10-0591-05	JvdH	JB	28 APR 05
C	EH-0865-00	RvH	R.F.	09 08-00
B	EH-1417-99	T.K.	W.C.	19-02-00
0	EH-2124-98	W.S	W.S	02-09-98

CUSTOMER DRAWING WILL NOT BE UPDATED

© COPYRIGHT 19 - BY AMP-HOLLAND B.V.
ALL INTERNATIONAL RIGHTS RESERVED.AMP PRODUCTS MAY BE COVERED BY U.S. AND FOREIGN AND/OR PATENTS PENDING.
THIS DRAWING IS UNPUBLISHED
~~RELEASED FOR PUBLICATION ,19~~

AMP | AMP-HOLLAND B.V. 's-Hertogenbosch, The Netherlands.

NAME HDP-20 SIZE 1 VERTICAL+ REC. SOLDER HEADER: FOR 2,4 mm P.C.B.'S

DR.: W.SOOMERS	CHK.: R.FIJTEN	APP.: R.FIJTEN	DWG.No.	REV.LTR.	SHEET	
DATE: 02-09-98	DATE: 09-08-00	DATE: 09-08-00	C-1230042	D	1 OF 1	A2

R6-129 (REV.04-91)