THIS DRAWING IS UNPUBLISHED. RELEASED FOR PUBLICATION -,N/A .
© COPYRIGHT N/A BY TYCO ELECTRONICS CORPORATION. ALL INTERNATIONAL RIGHTS RESERVED.

LOC	DIST
DF	DO

REVISIONS

P	LTR	DESCRIPTION	DATE	DWN	APVD
	Z	REVISED PER ECO-09-013174	15-04-09	CT	RL

1. THIS PLUG WILL MATE WITH ANY 11C1, SIZE 2 RECEPTACLE IN AMPLIMITE SERIES.
2. MAXIMUM WIRE INSULATION TO BE USED WITH THIS PLUG IS ø.068.
3. THIS CONNECTOR ACCEPTS (1) POWER 8, OR COAX PIN CONTACT IN POSITIONS A1, PURCHASED SEPARATELY.
4. THIS CONNECTOR ACCEPTS SIZE 20 PIN CONTACTS IN POSITIONS 1 THRU 32. PURCHASED SEPARATELY.

5. STEEL PER ASTM-A-109.
6. BRASS PER MIL-C-50 AND ASTM-B-36 UNS NO. C26000.
7. CADMIUM PLATED PER QQ-P-416.
8. GOLD PLATED PER MIL-G-45204 TYPE II, GRADE C, CLASS 1 OVER COPPER PER MIL-C-14550, CLASS IV.
9. FINISH: TIN PER ASTM-B-545 .000200 MIN THK OVER COPPER PER AMS2418 .000100-.000200 THK.
10. FRONT SHELL HAS GROUNDING INDENTS FOR 211111-4, 211111-6, & 5-211111-4 ONLY.
11. FINISH: BRIGHT TIN PER ASTM-B-545 .000400-.000550 THK OVER COPPER PER AMS2418 .000050 MIN THK.
12. FINISH: TIN PER ASTM-B-545 .000200 MIN THK OVER COPPER PER AMS2418 .000100-.000200 THK.
13. FINISH: ZINC PLATE PER ASTM-B-633 .000200-.000400 THK WITH SUPPLEMENTARY CHROMATE (Cr3+).

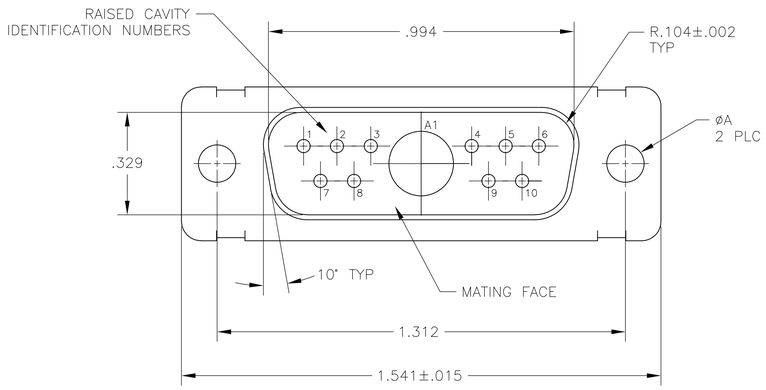

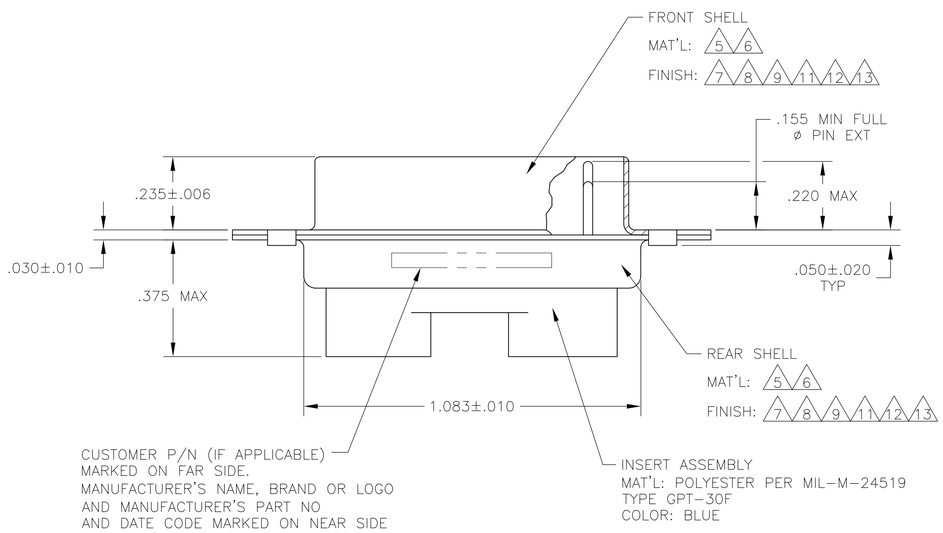

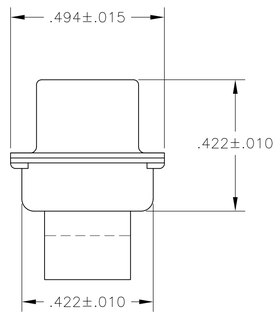

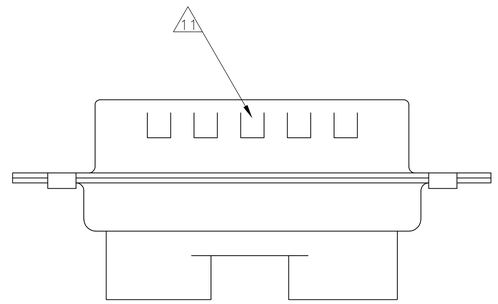

REMARKS	ØA	CUSTOMER PART NO.	MFG'S PART NO.
5 10 12	.120	–	5-211111-4
5 13	.120	–	5-211111-1
5 11	.120	–	211111-7
5 10 11	.120	–	211111-6
6 8	.120	B010942-0037	211111-5
5 9 10	.120	–	211111-4
6 8	.154	311P405-9P-B-15	211111-3
6 8	.120	311P405-9P-B-12	211111-2
5 7	.120	–	211111-1

THIS DRAWING IS A CONTROLLED DOCUMENT.

DIMENSIONS: INCHES

TOLERANCES UNLESS OTHERWISE SPECIFIED:
0 PLC ± –
1 PLC ± –
2 PLC ± –
3 PLC ± .005[0.13]
4 PLC ± –
ANGLES ± 0°30'

MATERIAL –
FINISH –

DWN T. SHUEY 09-JAN-88
CHK A.EMADI 21-JAN-88
APVD A.EMADI 21-JAN-88
PRODUCT SPEC –
APPLICATION SPEC –
WEIGHT –

Tyco Electronics
Tyco Electronics Corporation
Harrisburg, PA 17105-3608

NAME
PLUG ASSEMBLY
AMPLIMITE 11C1
SIZE 2, SERIES 109, COAX MIX

SIZE	CAGE CODE	DRAWING NO	RESTRICTED TO
A1	00779	C-211111	–

CUSTOMER DRAWING
SCALE 4:1 SHEET 1 OF 1 REV Z