THIS DRAWING IS UNPUBLISHED. RELEASED FOR PUBLICATION - ,- .
© COPYRIGHT - BY TYCO ELECTRONICS CORPORATION. ALL RIGHTS RESERVED.

LOC	DIST
AD	00

REVISIONS

P	LTR	DESCRIPTION	DATE	DWN	APVD
	L	ECO-07-012860	24JUL2007	RB	MM

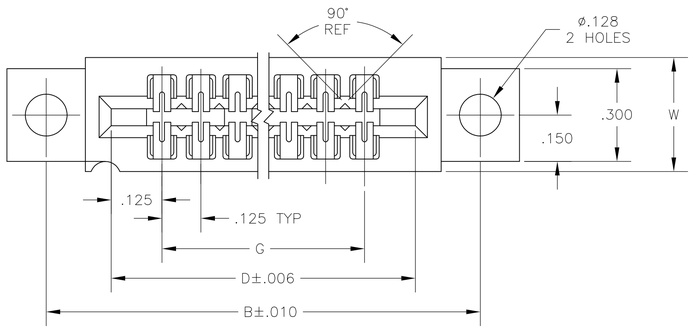

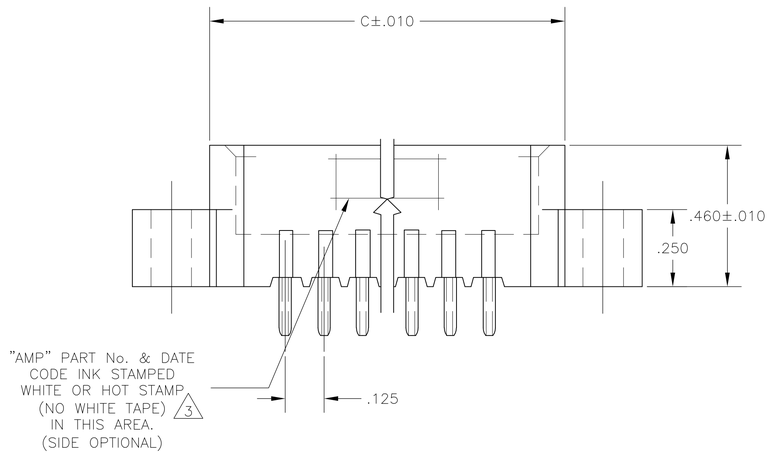

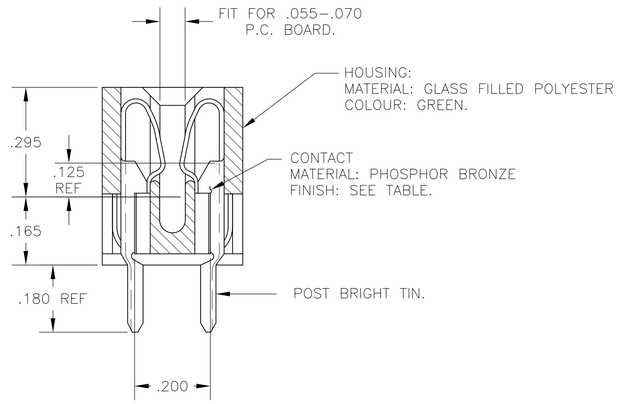

1. .000015 MIN GOLD OVER .000050 MIN. NICKEL IN CONTACT AREA.
2. .000030 MIN GOLD OVER .000050 MIN. NICKEL IN CONTACT AREA.
3. ALL PARTS ASSEMBLED IN MEXICO MUST BE STAMPED "ASSY IN MEXICO" THE WORD "MEXICO" CAN BE SUBSTITUTED ONLY WHERE PART SIZE PROHIBITS STAMPING "ASSY IN MEXICO", INK STAMP COLOR WHITE OR HOT STAMP (NO WHITE TAPE) 115-9009APPROX WHERE SHOWN, SIDE OPTIONAL.
4. MATTE TIN PLATED CONTACT TAILS.

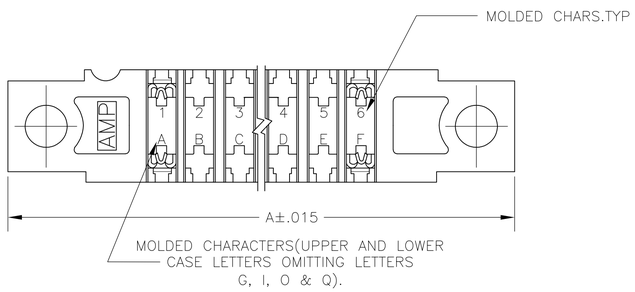

	1 PART NO	NO.OF. POSITION	A	B	C	D		G	2 PART NO	W
	4 –	18	3.055	2.795	2.535	2.375		2.125	7-530663-4	.370
	4 –	10	2.055	1.795	1.535	1.375		1.125	7-530663-2	.370
OBSOLETE	~~1-530663-2~~	~~50~~	~~7.055~~	~~6.795~~	~~6.535~~	~~6.375~~		~~6.125~~	~~3-530663-2~~	~~.437~~
OBSOLETE	~~1-530663-1~~	~~43~~	~~6.180~~	~~5.920~~	~~5.660~~	~~5.500~~		~~5.250~~	~~3-530663-1~~	~~.437~~
OBSOLETE	~~1-530663-0~~	~~40~~	~~5.805~~	~~5.545~~	~~5.285~~	~~5.125~~		~~4.875~~	~~3-530663-0~~	~~.437~~
OBSOLETE	~~530663-9~~	~~36~~	~~5.305~~	~~5.045~~	~~4.785~~	~~4.625~~		~~4.375~~	~~2-530663-9~~	~~.370~~
OBSOLETE	~~530663-8~~	~~31~~	~~4.680~~	~~4.420~~	~~4.160~~	~~4.000~~		~~3.750~~	~~2-530663-8~~	~~.370~~
OBSOLETE	~~530663-7~~	~~30~~	~~4.555~~	~~4.295~~	~~4.035~~	~~3.875~~		~~3.625~~	~~2-530663-7~~	~~.370~~
OBSOLETE	~~530663-6~~	~~28~~	~~4.305~~	~~4.045~~	~~3.785~~	~~3.625~~		~~3.375~~	~~2-530663-6~~	~~.370~~
OBSOLETE	~~530663-5~~	~~22~~	~~3.555~~	~~3.295~~	~~3.035~~	~~2.875~~		~~2.625~~	~~2-530663-5~~	~~.370~~
OBSOLETE	~~530663-4~~	18	3.055	2.795	2.535	2.375		2.125	2-530663-4	.370
OBSOLETE	~~530663-3~~	~~15~~	~~2.680~~	~~2.420~~	~~2.160~~	~~2.000~~		~~1.750~~	~~2-530663-3~~	~~.370~~
OBSOLETE	~~530663-2~~	~~10~~	~~2.055~~	~~1.795~~	~~1.535~~	~~1.375~~		~~1.125~~	~~2-530663-2~~	~~.370~~
OBSOLETE	~~530663-1~~	~~6~~	~~1.555~~	~~1.295~~	~~1.035~~	~~.875~~		~~.625~~	~~2-530663-1~~	~~.370~~

THIS DRAWING IS A CONTROLLED DOCUMENT.

DIMENSIONS: INCHES

TOLERANCES UNLESS OTHERWISE SPECIFIED:
0 PLC ± –
1 PLC ± –
2 PLC ± –
3 PLC ± .005
4 PLC ± –
ANGLES ± –

MATERIAL: SEE CALL-OUT
FINISH: SEE CALL-OUT

DWN – 04APR75
CHK – 04APR75
APVD – 14APR75
PRODUCT SPEC –
APPLICATION SPEC –
WEIGHT –

Tyco Electronics
Tyco Electronics Corporation
Harrisburg, PA 17105-3608

NAME: HOUSING ASSY. LOW PROFILE EDGE CONNECTOR FLOW SOLDER FOR .052 DIA HOLE .125 X .200 CENTERS, .180 LONG.

SIZE	CAGE CODE	DRAWING NO	RESTRICTED TO
A1	00779	C-530663	–

CUSTOMER DRAWING | SCALE 4:1 | SHEET 1 OF 1 | REV L