75234

NOTES:
1. REFER TO BACKPLANE SALES DRAWINGS FOR ROW AND COLUMN ASSIGNMENTS.
2. INSTALLATION TORQUE SPECIFICATIONS = 7.8 - 8.5 IN-LBS.
3. PLATED THRU HOLE TO CONNECT TO CHASSIS FOR GROUNDED GUIDE MODULE OPTION.
4. REFER TO PS-75221-999 FOR GBX PRODUCT SPECIFICATION.

TABLE #1 - HOLE SPECIFICATIONS

	GROUNDED	UNGROUNDED
FINISHED HOLE SIZE	Ø5.58-5.73	Ø5.58-5.73
PAD	Ø 8.5	N/A
PLATED	YES	NO
DRILL (mm)	5.79mm	5.61mm
DRILL (IN)	0.228"	0.221"

TABLE #2 - SCREW SPECIFICATIONS

SCREW P/N	DESCRIPTION	BOARD THICKNESS
73774-3005	#6-32 x 0.375" LONG SQUARE CONICAL MACHINE SCREW	1.6-4.0 mm
73774-3010	#6-32 x 0.500" LONG SQUARE CONICAL MACHINE SCREW	4.0-7.5 mm
73774-3015	#6-32 x 0.625" LONG SQUARE CONICAL MACHINE SCREW	7.5-10.0 mm

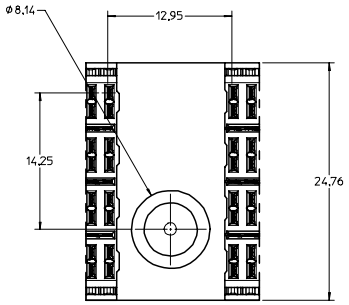

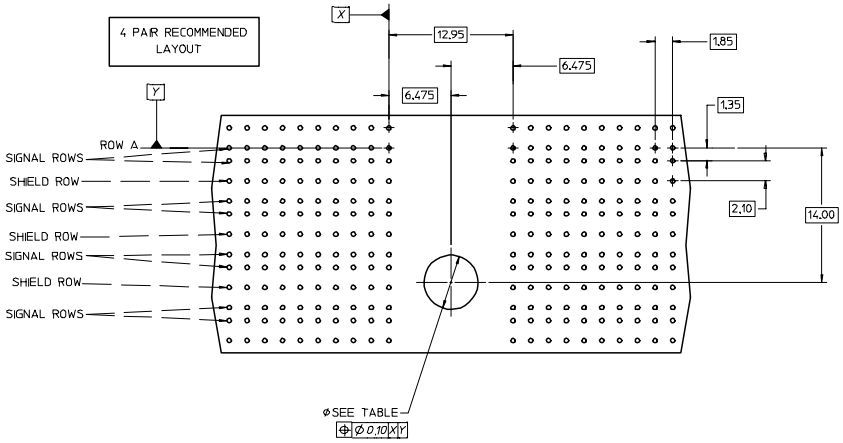

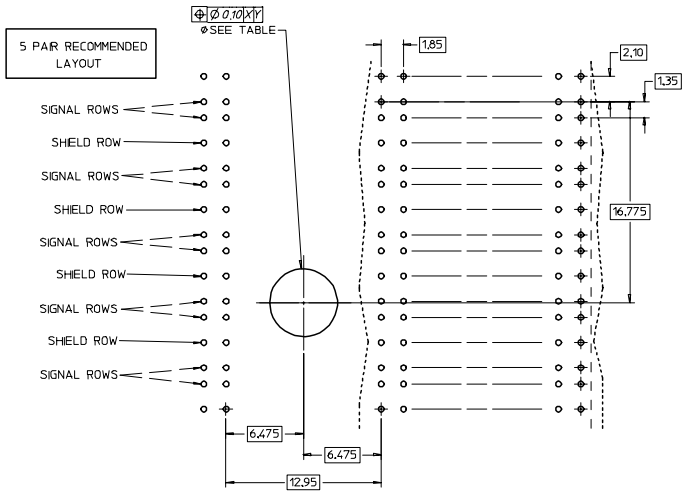

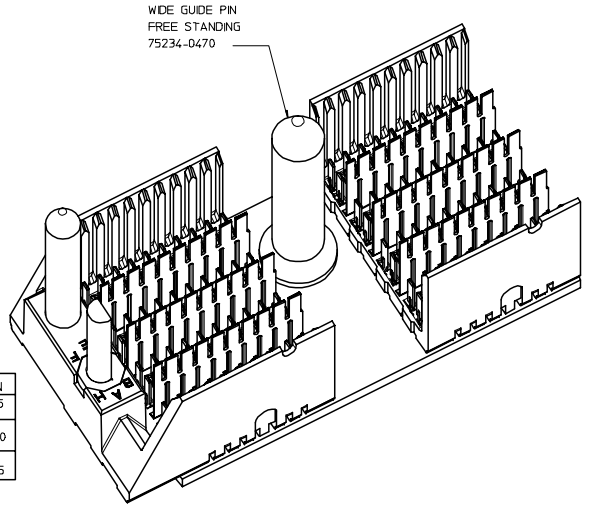

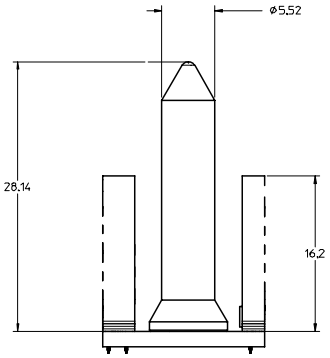

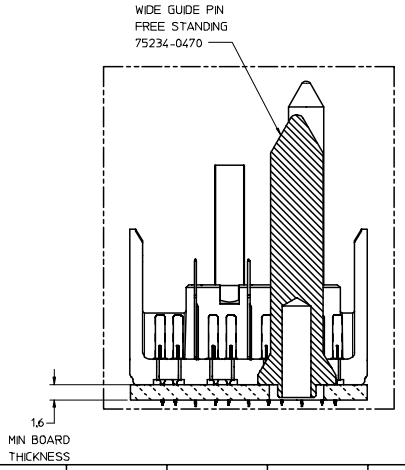

KIT P/N	BOARD THICKNESS	GUIDE PIN P/N	SCREW P/N
75234-1470	1.6 - 5.0mm	75234-0470	73774-3005
75234-2470	5.0-8.0 mm	75234-0470	73774-3010
75234-3470	8.0-10.0 mm	75234-0470	73774-3015

INITIAL RELEASE
EC NO: UCP2005-1211
DRWN: JBINGHAM 2004/12/15
CHKD: 2004/12/15
APPR: CBIXLER 2004/12/15
REV DESCRIPTION
A1

QUALITY SYMBOLS
▼ - 0
C - 0

GENERAL TOLERANCES (UNLESS SPECIFIED)

	mm	INCH
4 PLACES	± ---	± ---
3 PLACES	± ---	± ---
2 PLACES	± ---	± ---
1 PLACE	± ---	± ---

ANGULAR ±---°

DRAFT WHERE APPLICABLE
MUST REMAIN WITHIN DIMENSIONS

SCALE 4:1
DESIGN UNITS METRIC
DIMENSION STYLE MM ONLY
DRAWN BY NMARTIN DATE 2004/08/04
CHECKED BY JLAURX DATE 2004/08/04
APPROVED BY SREED DATE 2004/08/04

THIRD ANGLE PROJECTION
REVISE ON CAD ONLY

TITLE
GBX BACKPLANE WIDE GUIDE PIN FREE STANDING BOARD LAYOUT DRAWING

molex MOLEX INCORPORATED

MATERIAL NO. SEE CHART
DOCUMENT NO. SD-75234-110
SHEET NO. 1 OF 1

THIS DRAWING CONTAINS INFORMATION THAT IS PROPRIETARY TO MOLEX INCORPORATED AND SHOULD NOT BE USED WITHOUT WRITTEN PERMISSION

D

fb_frame_D
Rev. B1 2000/08/01