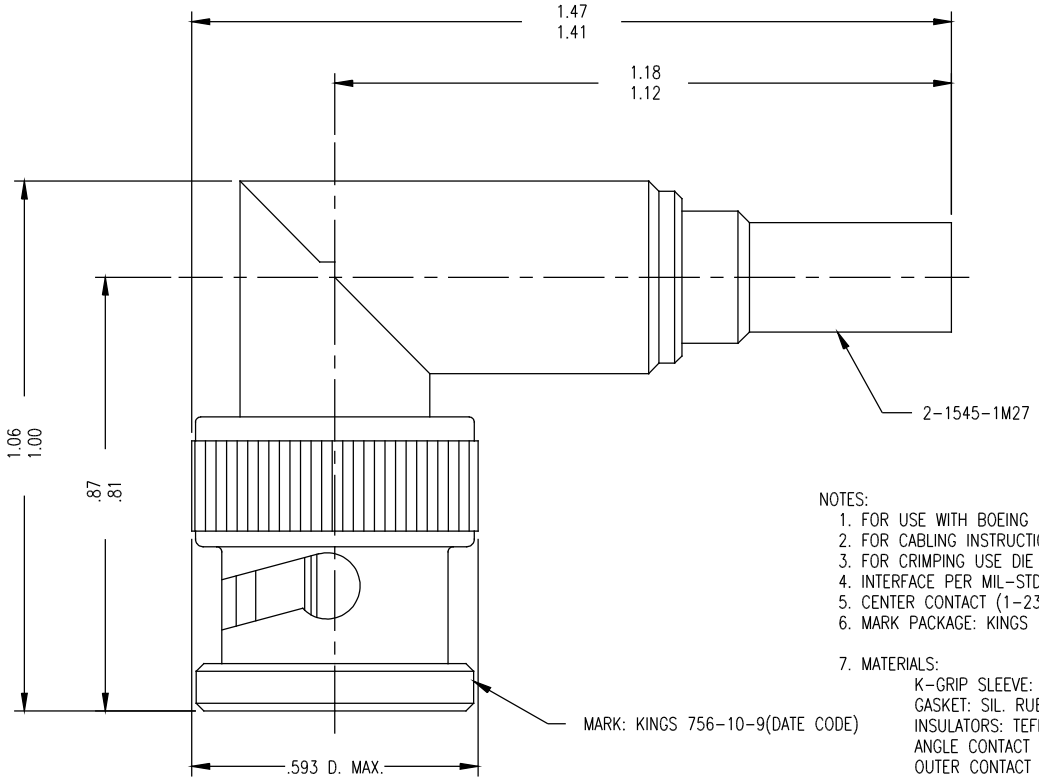

NOTES:

1. FOR USE WITH BOEING BMS13-65 OE & ADAMS RUSSELL FC11Z CABLES.
2. FOR CABLING INSTRUCTIONS SEE 3-546-1.
3. FOR CRIMPING USE DIE KTH-2214.
4. INTERFACE PER MIL-STD-348, FIG. 301-1.
5. CENTER CONTACT (1-2359-1MA9) SUPPLIED UNASSEMBLED.
6. MARK PACKAGE: KINGS 756-10-9(DATE CODE)
7. MATERIALS:
   - K-GRIP SLEEVE: COM. BRONZE TUBE PER ASTM B135
   - GASKET: SIL. RUB., A-A-59588
   - INSULATORS: TEFLON, PER ASTM D1710
   - ANGLE CONTACT } OUTER CONTACT } BER. COP., PER ASTM B196
   - ALL OTHER PARTS: BRASS PER ASTM B16
8. FINISHES:
   - CENTER CONTACTS: .000050 MIN GOLD PLATE, PER ASTM B488 OVER .000050 MIN. NICKEL PER AMS-QQ-N-290 (RoHS)
   - OUTER CONTACT } SPRING CONTACT } .000200 MIN SILVER PLATE PER ASTM B700 OVER .000020 MIN NICKEL PER AMS-QQ-N-290 (RoHS)
   - ALL OTHER METAL PARTS: .000050 MIN NICKEL PER AMS-QQ-N-290 OVER .000050 MIN COPPER PER ASTM B734 (RoHS)
9. ELECTRICAL CHARACTERISTICS:
   - NOMINAL IMPEDANCE: 50 OHMS
   - FREQUENCY RANGE: DC TO 4 GHz.
   - VOLTAGE RATING: 500 VRMS
10. WEIGHT: 17.3 GRAMS

756-10-9

REVISIONS

ISSUE	CHANGES
0	ER 34043 KH 08/17/92
B	REVISED PER DMF304 & ER041755 KPL 04/25/12

CUSTOMER SALES DRAWING

THIS DRAWING, THE DESIGNS AND IDEAS EMBODIED IN THE DEVICE TO WHICH IT RELATES, AND THE METHOD OF PRODUCING THE DEVICE, ARE THE PROPERTY OF WINCHESTER ELECTRONICS CORPORATION AND SHALL NOT BE EMPLOYED, COPIED, OR DISCLOSED TO ANYONE, IN ANY MANNER WITHOUT THE CONSENT OF WINCHESTER ELECTRONICS CORPORATION.

SCALE 4:1

APPROX SURFACE AREA

WAS: E-17517

CAGE CODE: 91836

REF: BOEING

PLUG, ANG, BNC

DRAWN	KH	DATE	07/15/92
DESIGN	JT	DATE	07/17/92
APPR.		DATE	

KINGS by WINCHESTER ELECTRONICS
Winchester Electronics Corporation
62 Barnes Industrial Road North
Wallingford, Connecticut 06492

756-10-9