TOSHIBA Bipolar Linear Integrated Circuit Silicon Monolithic

TA2057N

AM / FM IF + FM St DET (for digital tuning system)

TA2057N is the AM / FM IF + FM St DET system IC, which is designed for DTS radios.
This IC is included many functions and these can be used for digital tuning system with IF counter.

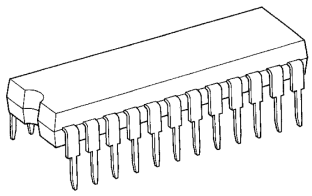

SDIP24-P-300-1.78

Weight: 1.2g (typ.)

Features

- Suitable for combination with digital tuning system which has IF counter.
- One terminal type AM / FM IF count output (auto stop signal) for IF counter of digitl tuning system.
- Built−in mute circuit for IF count output.
- Adjustable for IF count output sensitivity by external resistance of pin(2) (AM), and pin(3) (FM).
- For adopting ceramic discriminator and ceramic resonator, it is not necessary to adjust the FM quad detector circuit and FM st DET vco circuit.
- Built−in AM local oscillator buffer output circuit.
- Built−in AM IF buffer output circuit for AM stereo.
- Operating supply voltage range (Ta = 25°C): V_{CC} = 3.5~14V

※Handle with care to prevent devices from deteriorations by static electricity.

Block Diagram

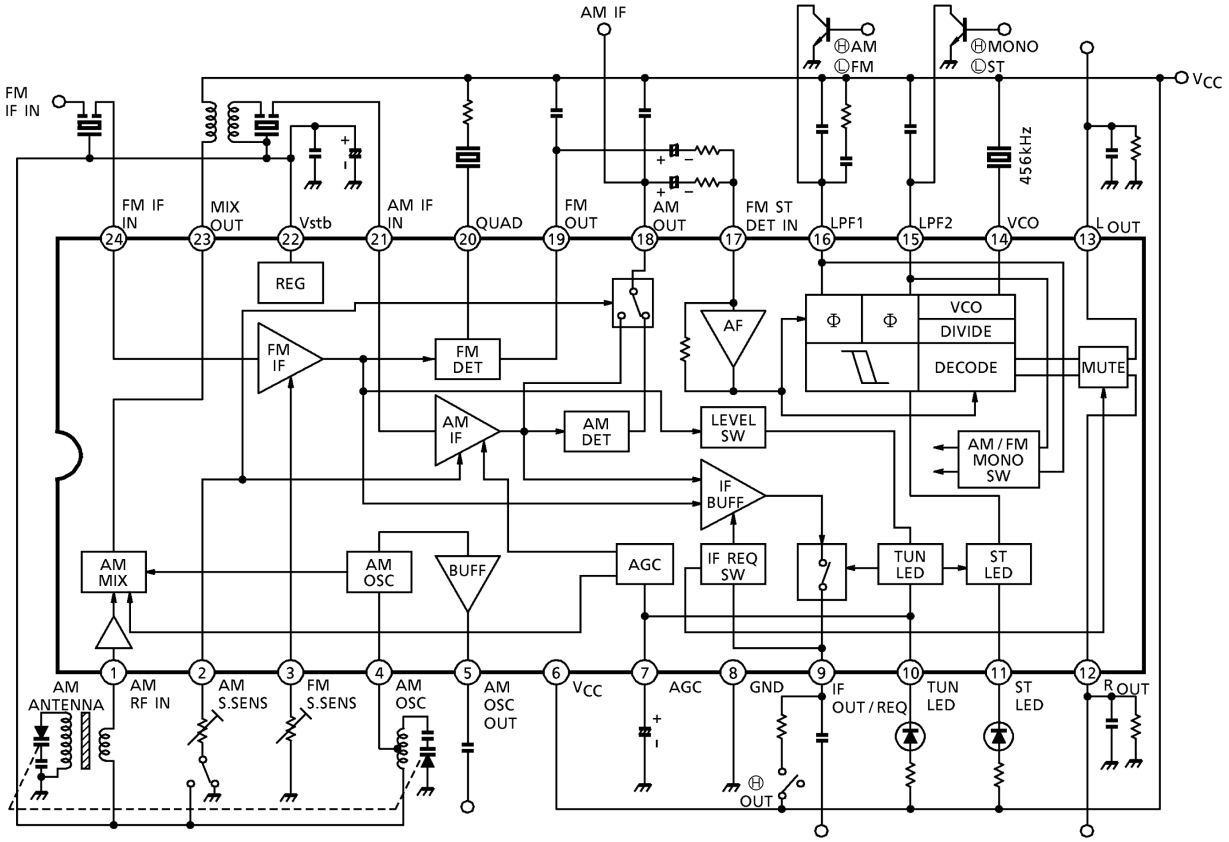

Terminal Explanation (terminal voltage shows typical value at Ta = 25°C, V_{CC} = 5V, SW_3 = off, SW_9 = GND, and non–signal test circuit)

Pin No.	Characteristic	Internal Circuit	DC Voltage (V)	
			FM	AM
1	AM RF in	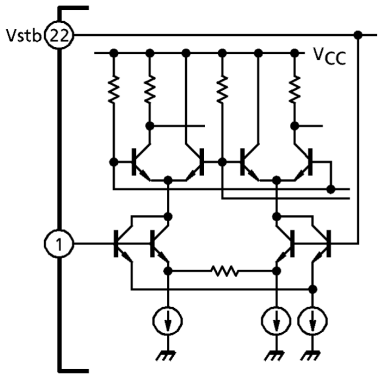	1.95	1.95
2	AM s·sens ・AM IF count output sensitivity adjust terminal ・Bias terminal for AM IF / DET out switch circuit V_2 = GND →AM DET out (pin(19)) V_2 = Vstb →AM IF out (pin(19))	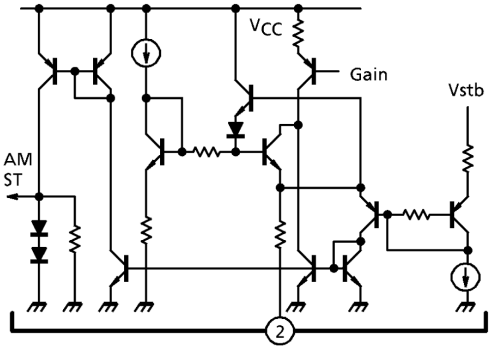	0.5 (at SW_9 = Vstb1.45) R2 = 10kΩ	0.5 (at SW_9 = Vstb1.45) R2 = 10kΩ
3	FM s·sens ・FM IF count output sensitivity adjust terminal	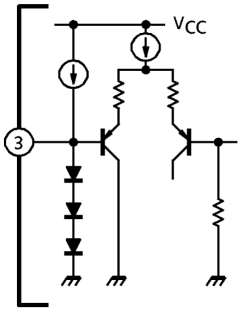	0 R_3 = 10kΩ	0 R_3 = 10kΩ

Pin No.	Characteristic	Internal Circuit	DC Voltage (V)	
			FM	AM
4	AM OSC	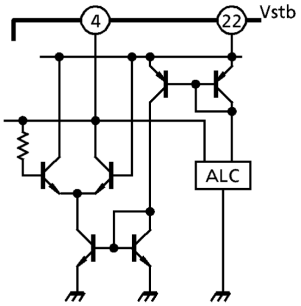	1.95	1.95
5	AM OSC out	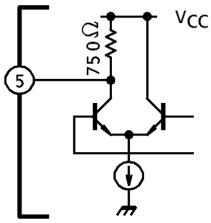	5.0	4.75
6	V_{CC}	—	5.0	5.0
7	AGC	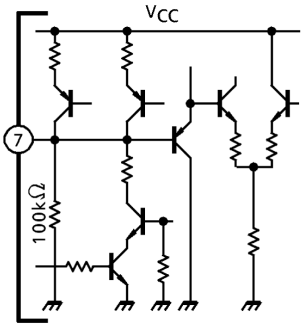	0.01	0.01
8	GND	—	0	0
9	IF out / REQ ・IF count output terminal ・IF count output / FM st DET mute circuit control terminal $V_9 = V_{CC} \rightarrow$ on V_9 = open → off	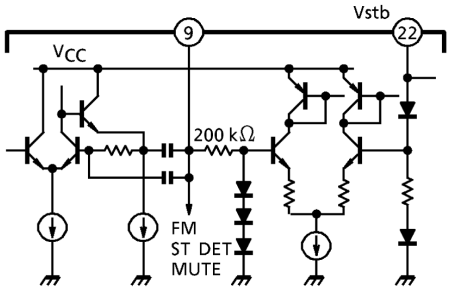	—	—

Pin No.	Characteristic	Internal Circuit	DC Voltage (V) FM	DC Voltage (V) AM
10	Tun LED	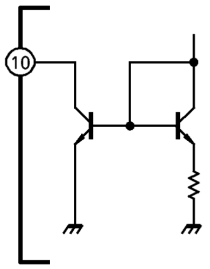	—	—
11	St LED	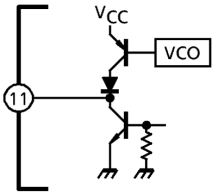	—	—
12	R–out	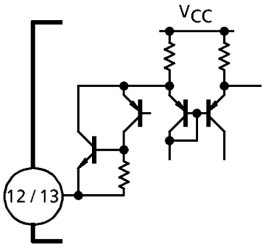	1.4	1.4
13	L–out		1.4	1.4
14	VCO	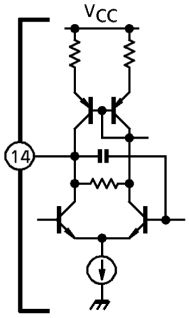	4.3	4.3
15	LPF2 ・LPF terminal for synchronous detector ・VCO stop terminal V_{15} = GND →VCO stop	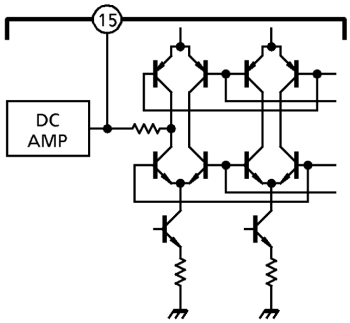	3.6	3.6

Pin No.	Characteristic	Internal Circuit	DC Voltage (V) FM	DC Voltage (V) AM
16	LPF1 ・LPF terminal for phase detector ・Bias terminal for AM / FM switch circuit V_{16} = GND → AM V_{16} = open → FM	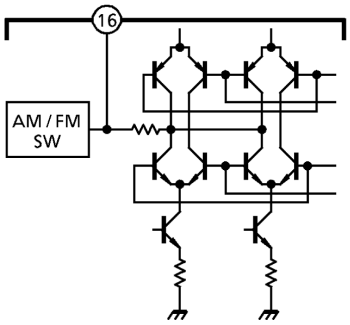	3.6	0
17	MPX in	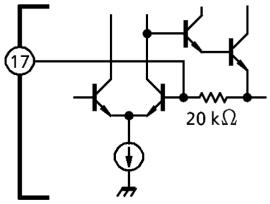	1.4	1.4
18	AM DET out ・AM DET / IF out V_2 = GND → AM DET out V_2 = open → FM IF out	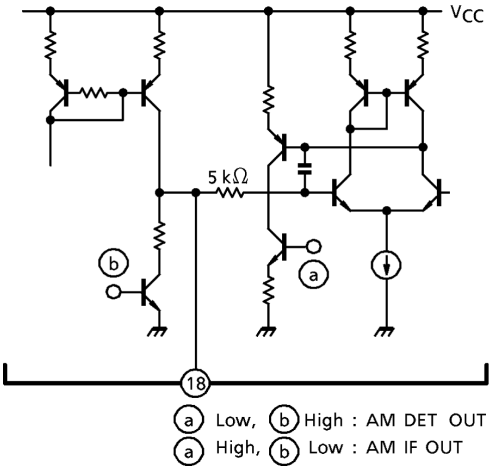	1.44	1.5 (at SW_9 = Vstb1.3)
19	FM DET out	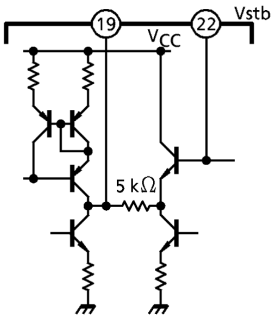	1.2	1.5

Pin No.	Characteristic	Internal Circuit	DC Voltage (V)	
			FM	AM
20	QUAD	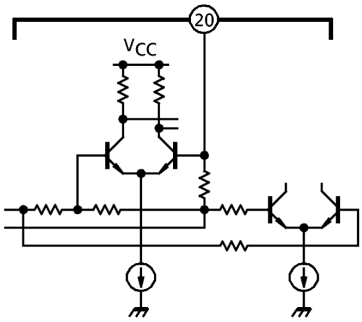	1.1	1.5
21	AM IF in	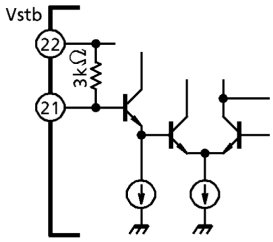	1.95	1.95
22	Vstb	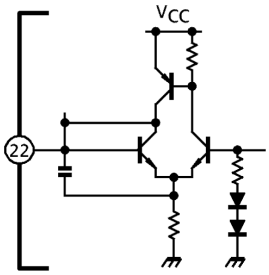	1.95	1.95
23	Mix out	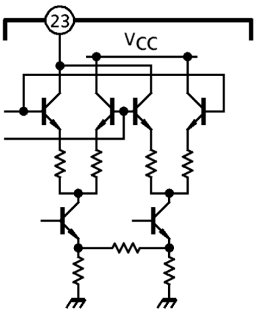	5.0	5.0
24	FM IF in	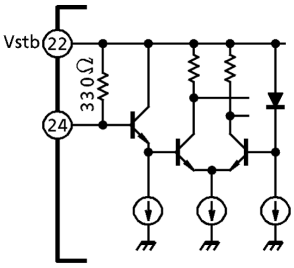	1.95	1.95

Application Note

1. How to control the IF count output signal (pin(9) output)

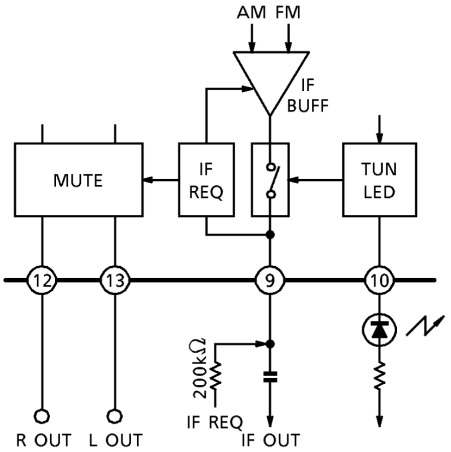

		Tun LED	
		On	Off
V_9	H	Come on	Non output
	Open	Non output	Non output

		Mute Circuit
V_9	H	On
	Open	Off

- Whether or not there is the IF count output signal (pin(9) output) is determined by the and of the pin(9) control voltage: V_9 and tuning LED on / off switching.

  In the condition of

  V_9: High (active high, V_{TH} = 2V (type.))

  Tun LED: On ($V_{in} \geq V_L$ + 2dB (type.))

  The IF count output signal come out from the pin(9).
- The signal waveform is FM: Rectangular, AM: Differential wave, and the level is 500mV_{p-p} (typ.)
- Mute circuit is action by the pin(9) control voltage: V_9 (at high) in matrix output circuit.

2. How to adjust the IF count output sensitivity

- The IF count output sensitivity (search sensitivity) can be adjusted by varying the IF amp. Gain for FM and varying the mixer gain for AM.
- However, this is only possible at the auto–tuning mode (external voltage supplied to pin(9) is at high level). The original gain returns while receiving a broadcast station (supplied voltage to pin(9) is at low level).

- The gain loss of FM IF amp. (typ.)

R_3	
0Ω	10kΩ
−25dB	0dB

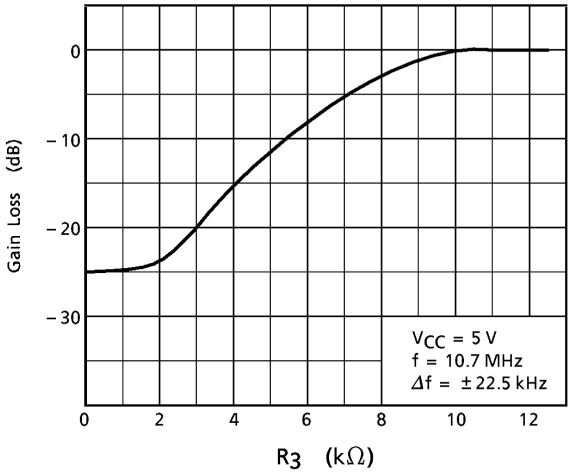

- The gain loss of AM mixer (typ.)

	R_2	
	0Ω	10kΩ (Note)
Det. Output mode	−29dB	0dB
IF amp. Output mode	−29dB	0dB

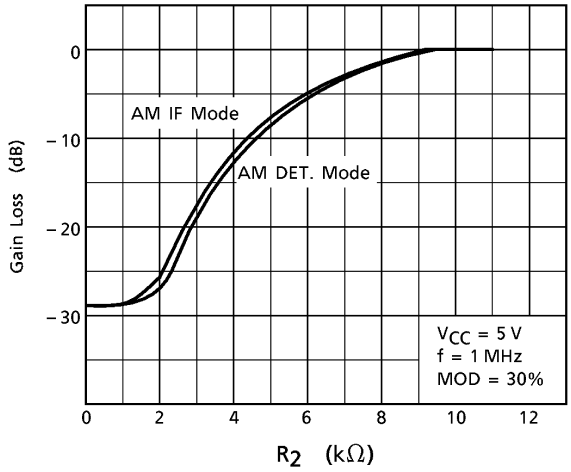

(Note): It is necessary to set up the value of R_2 under 20kΩ.
When the R_2 is over 20kΩ, it is feared that the mode can not change.

3. How to control the AM IF output signal (pin(18) output)

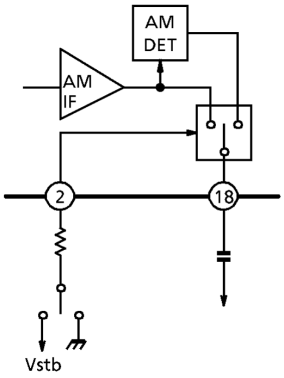

		Pin(18) Output Signal
V_2	GND	AM DET out
	Vstb	AM IF out

4. AM local oscillator buffer output

- The output impedance of AM local oscillator buffer output pin (pin(5)) is 750Ω (typ.).
- It is possible to reduce the output level to add the resistance between the pin(5) and V_{CC} line.
  The signal waveform is the rectangular wave, and the level is 500mV_{p-p}. (f_{OSC} = 1.45MHz (typ.))
- The higher local oscillation frequency (f_{OSC}) to be, the lower buff output level to be owing to the load capacity. So, in the case that it is connected to other circuits, take care of the input capacity of these circuits and stray capacity of wire.

5. FM detector circuit
For the FM detector circuit, detector coil is able to use instead of ceramic discriminator.
Recommended circuit and recommended coil are as follows. In this case, please take care that V_{in} (lim.) fall a little.

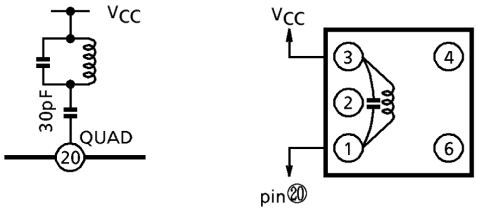

Test Frequency	C_o (pF)	Q_o	Turns				Wire (mmϕ)	REF.
			1–2	2–3	1–3	4–6		
10.7MHz	100	100	—	—	12	—	0.12 UEW	Sumida electric Co., ltd. 2153–4095–189 or equivalent

6. FM / AM switch and forced monaural switch

- FM / AM switchover and stereo / forced monaural switchover are done by pin(16) and pin(15).
- FM / AM switch (pin(16))

  V_{16}: Low (active low, V_{TH} = 1.0V (typ.) →AM
  V_{16}: Open →FM
- Stereo / forced monaural switch (pin(15))

  V_{15}: Low (active low, V_{TH} = 1.0V (typ.)
  →Forced manaural
  V_{15}: Open →Stereo

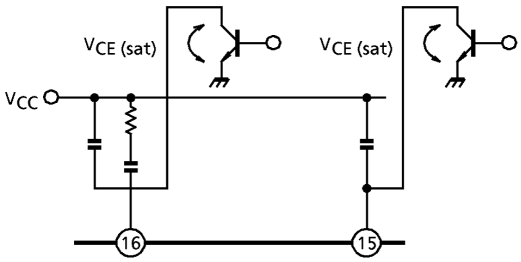

Maximum Ratings (Ta = 25°C)

Characteristic	Symbol	Rating	Unit
Supply voltage	V_{CC}	14	V
LED current	I_{LED}	10	mA
LED voltage	V_{LED}	14	V
Power dissipation	P_D (Note)	1200	mW
Operating temperature	T_{opr}	−25~75	°C
Storage temperature	T_{stg}	−55~150	°C

(Note): Derated above 25°C in the proportion of 9.6mW / °C

Electrical Characteristics

Unless Otherwise Specified, Ta = 25°C, V_{CC1} = 5V, SW_3 = off, SW_9 = GND, SW_{10} = 1
FM IF: f = 10.7MHz, Δf = ±22.5kHz, f_m = 1kHz
AM: f = 1MHz, MOD = 30%, f_m = 1kHz
FM St Det: f_m = 1kHz

Characteristic		Symbol	Test Cir–cuit	Test Condition	Min.	Typ.	Max.	Unit
Supply current		I_{CC} (FM)	1	FM mode, V_{in} = 0	—	20	26	mA
		I_{CC} (AM)	1	AM mode, V_{in} = 0	—	20	26	
FM IF	Input limiting voltage	$V_{in\ (lim)}$	1	–3dB limiting point	38	43	48	dBμV EMF
	Recovered output voltage	VOD	1	V_{in} = 80dBμV EMF	70	100	140	mV_{rms}
	Signal to noise ratio	S / N	1	V_{in} = 80dBμV EMF	—	70	—	dB
	Total harmonic distortion	THD	1	V_{in} = 80dBμV EMF	—	0.2	—	%
	AM rejection ratio	AMR	1	V_{in} = 80dBμV EMF	—	50	—	dB
	LED on sensitivity	V_L	1	I_L = 1mA	43	48	53	dBμV EMF
	IF count output voltage	V_{IF} (FM)	1	SW_3: On, V_{in} = 80dBμV EMF	350	500	—	mV_{p-p}
	IF count output sensitivity	IF_{sens} (FM)	1	SW_3: On, SW_1: 0Ω	—	73	—	dBμV EMF
				SW_3: On, SW_1: 5.1kΩ	—	62	—	
AM	Gain	G_V	1	V_{in} = 23dBμV EMF	35	70	105	mV_{rms}
	Recovered output voltage	V_{OD}	1	V_{in} = 60dBμV EMF	70	100	140	mV_{rms}
	Signal to noise ratio	S / N	1	V_{in} = 60dBμV EMF	—	45	—	dB
	Total harmonic distortion	THD	1	V_{in} = 60dBμV EMF	—	0.5	—	%
	LED on sensitivity	V_L	1	I_L = 1mA	19	24	29	dBμV EMF
	Local OSC buff output voltage	V_{OSC} (AM)	1	f_{OSC} = 1.45MHz	350	500	—	mV_{p-p}
			1	f_{OSC} = 27MHz	—	500	—	
	AM IF output voltage for AM stereo	$V_{IF\ (ST)}$	1	SW_9: Vstb, MOD = 0% V_{in} = 60dBμV EMF, SW_{10}: 2	800	1100	1400	mV_{p-p}
	IF count output voltage	V_{IF} (AM)	1	SW_3: On, V_{in} = 60dBμV EMF	350	500	—	mV_{p-p}
	IF count output sensitivity	IF_{sens} (AM)	1	SW_3: On, SW_2: 0Ω	—	54	—	dBμV EMF
				SW_3: On, SW_2: 5.1kΩ	—	30	—	

Characteristic			Symbol	Test Cir–cuit	Test Condition		Min.	Typ.	Max.	Unit
FM St DET	Max. Composite input voltage		$V_{in\ max}$ (stereo)	1	L + R = 90%, P = 10% THD = 3%, SW_8 →LPF: On		—	800	—	mV_{rms}
	Separation		Sep.	1	L + R = 180mV_{rms} P = 20mV_{rms} SW_8 →LPF: On	f_m = 100Hz	—	45	—	dB
						f_m = 1kHz	35	45	—	
						f_m = 10kHz	—	45	—	
	Total harmonic distortion	Monaural	THD (mono)	1	V_{in} = 200mV_{rms} (mono)		—	0.05	—	%
		Stereo	THD (st)		L + R = 180mV_{rms} P = 20mV_{rms} SW_8 →LPF: On		—	0.05	—	
	Voltage gain		G_V (FM ST DET)	1	V_{in} = 200mV_{rms} (mono)		–2	0	2	dB
	Channel balance		C. B.	1	V_{in} = 200mV_{rms} (mono)		–2	0	2	dB
	Stereo LED sensitivity	On	V_L (ON)	1	Pilot input		—	10	18	mV_{rms}
		Off	V_L (OFF)				3	8	—	
	Stereo LED hystersis		V_H	1	To LED turn off from LED turn on		—	2	—	mV_{rms}
	Capture range		C. R.	1	P = 20mV_{rms}		—	±1.3	—	%
	Signal to noise ratio		S / N	1	V_{in} = 200mV_{rms} (mono)		—	78	—	dB

Test Circuit1

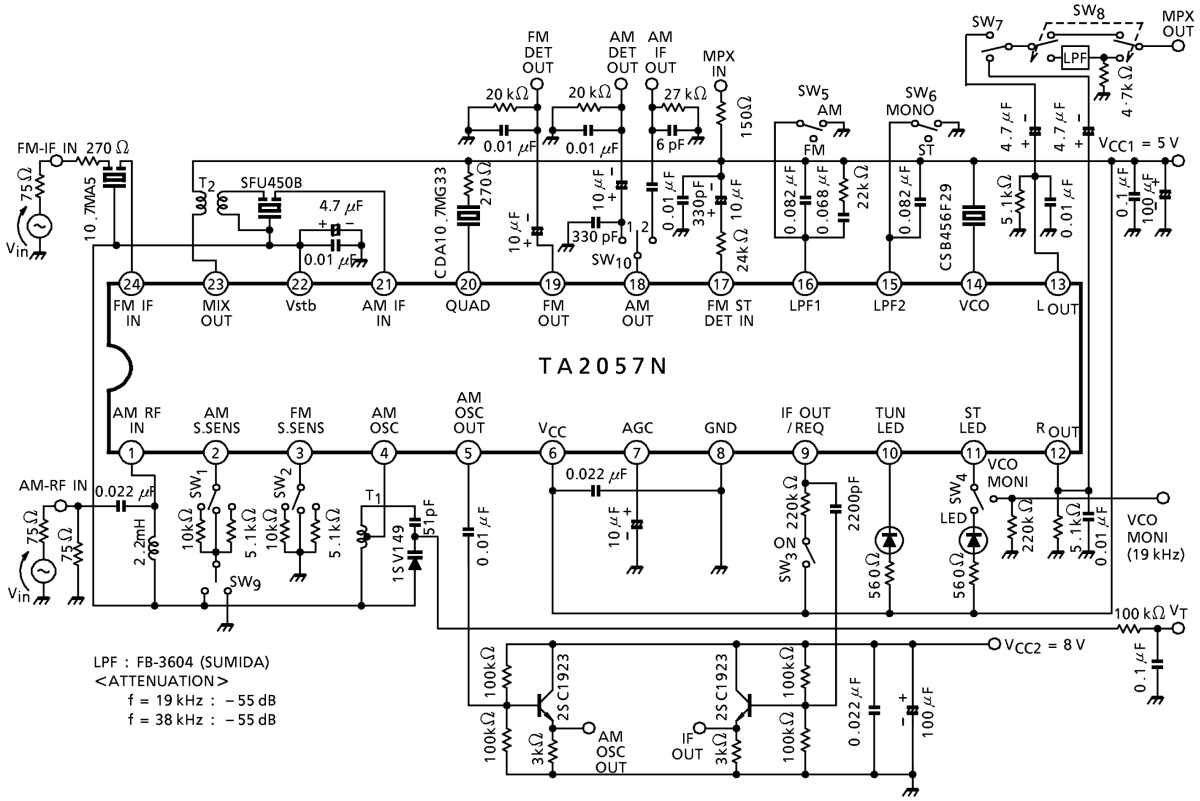

Coil Data (test condition1)

Coil No.	f	L (μH)	C_o (pF)	Q_o	Turn				Wire (mmϕ)	Ref. (coil no.)
					1–2	2–3	1–3	4–6		
T_1 AM OSC	796kHz	288	—	115	13	73	—	—	0.08 UEW	(S) 4147–1356–038 (T) A7BRS–12552Y (M) MJ–3273–3
T_2 AM IFT	455kHz	—	180	120	—	—	180	15	0.06 UEW	(S) 2150–2162–165 (T) 7MES–11368N (M) MJ–3337–1

(S): Sumida electric co., ltd.

(T): Toko co., ltd.

(M): Mitsumi electric co., ltd.

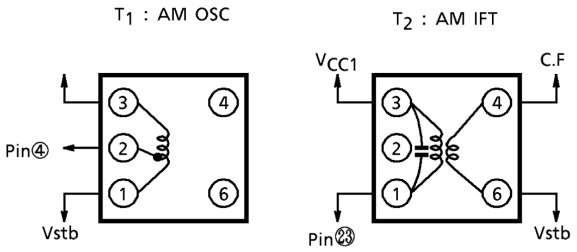

Test Circuit2

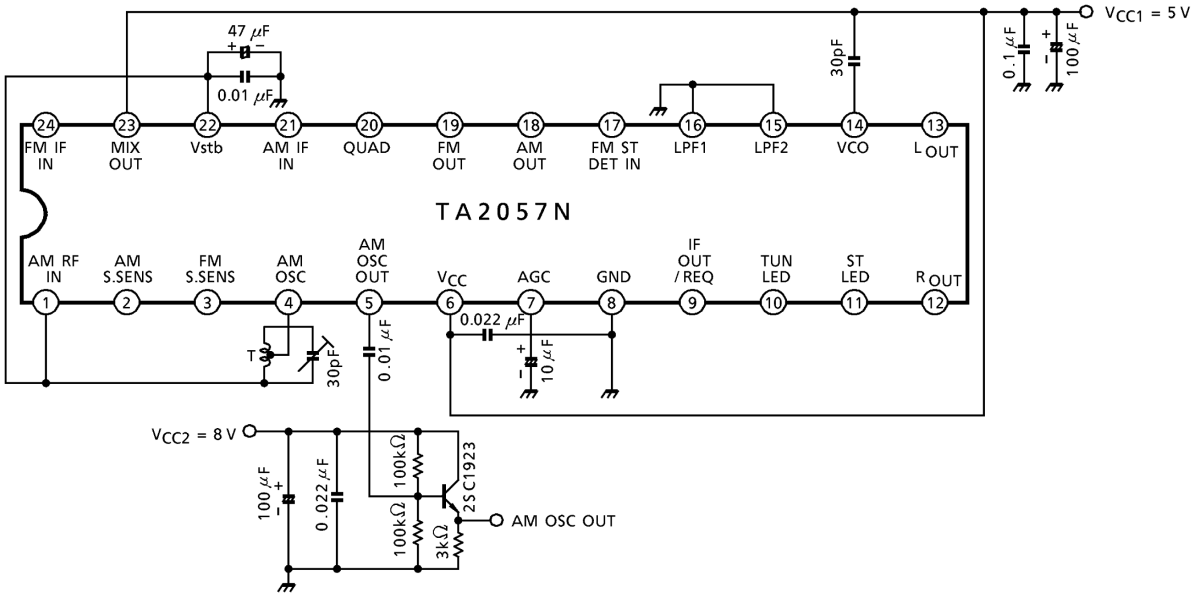

Coil Data (test circuit 2)

Coil No.	f	L (μH)	C_o (pF)	Q_o	Turn				Wire (mmϕ)	Ref. (coil no.)
					1–2	2–3	1–3	4–6		
T AM OSC	7.96MHz	1.4	—	84	1	6	7	—	0.08 UEW	(T) 7PL–1344Y

(T): Toko co., ltd.

T : AM OSC

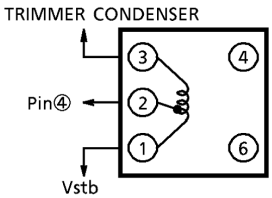

Package Dimensions

SDIP24-P-300-1.78 Unit : mm

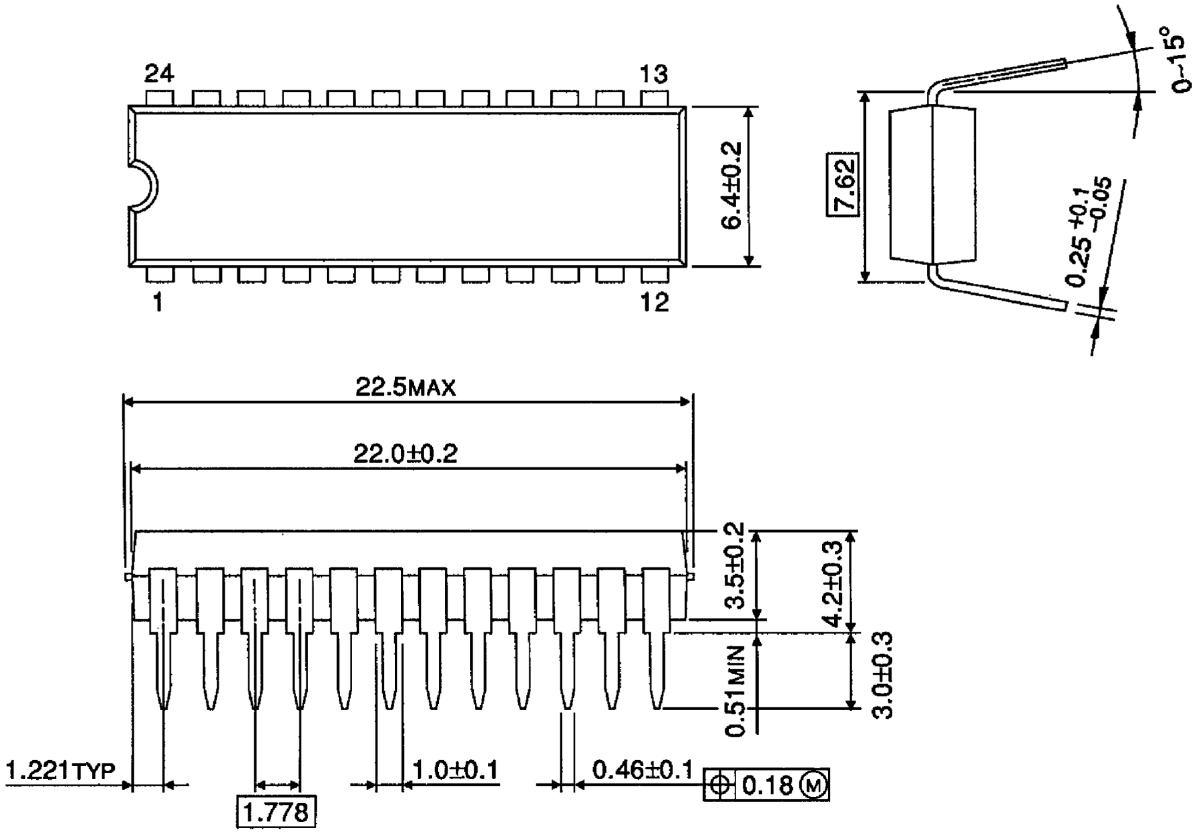

Weight: 1.2g (typ.)

RESTRICTIONS ON PRODUCT USE

000707EBA

- TOSHIBA is continually working to improve the quality and reliability of its products. Nevertheless, semiconductor devices in general can malfunction or fail due to their inherent electrical sensitivity and vulnerability to physical stress. It is the responsibility of the buyer, when utilizing TOSHIBA products, to comply with the standards of safety in making a safe design for the entire system, and to avoid situations in which a malfunction or failure of such TOSHIBA products could cause loss of human life, bodily injury or damage to property.
  In developing your designs, please ensure that TOSHIBA products are used within specified operating ranges as set forth in the most recent TOSHIBA products specifications. Also, please keep in mind the precautions and conditions set forth in the “Handling Guide for Semiconductor Devices,” or “TOSHIBA Semiconductor Reliability Handbook” etc..
- The TOSHIBA products listed in this document are intended for usage in general electronics applications (computer, personal equipment, office equipment, measuring equipment, industrial robotics, domestic appliances, etc.). These TOSHIBA products are neither intended nor warranted for usage in equipment that requires extraordinarily high quality and/or reliability or a malfunction or failure of which may cause loss of human life or bodily injury (“Unintended Usage”). Unintended Usage include atomic energy control instruments, airplane or spaceship instruments, transportation instruments, traffic signal instruments, combustion control instruments, medical instruments, all types of safety devices, etc.. Unintended Usage of TOSHIBA products listed in this document shall be made at the customer’s own risk.
- The products described in this document are subject to the foreign exchange and foreign trade laws.
- The information contained herein is presented only as a guide for the applications of our products. No responsibility is assumed by TOSHIBA CORPORATION for any infringements of intellectual property or other rights of the third parties which may result from its use. No license is granted by implication or otherwise under any intellectual property or other rights of TOSHIBA CORPORATION or others.
- The information contained herein is subject to change without notice.