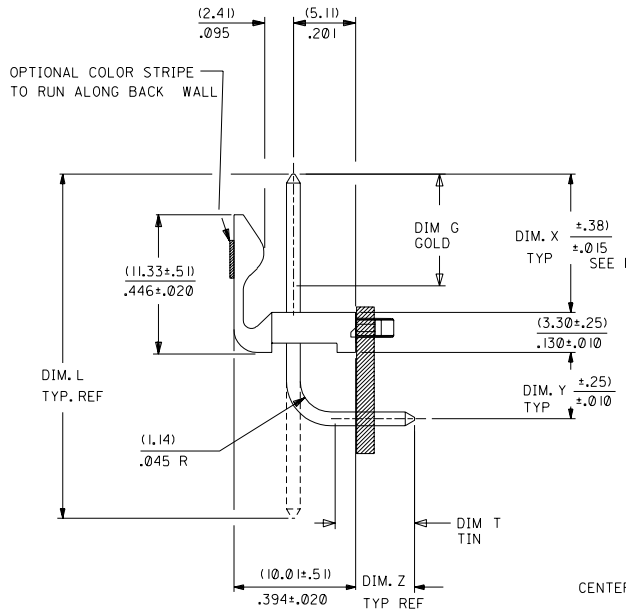

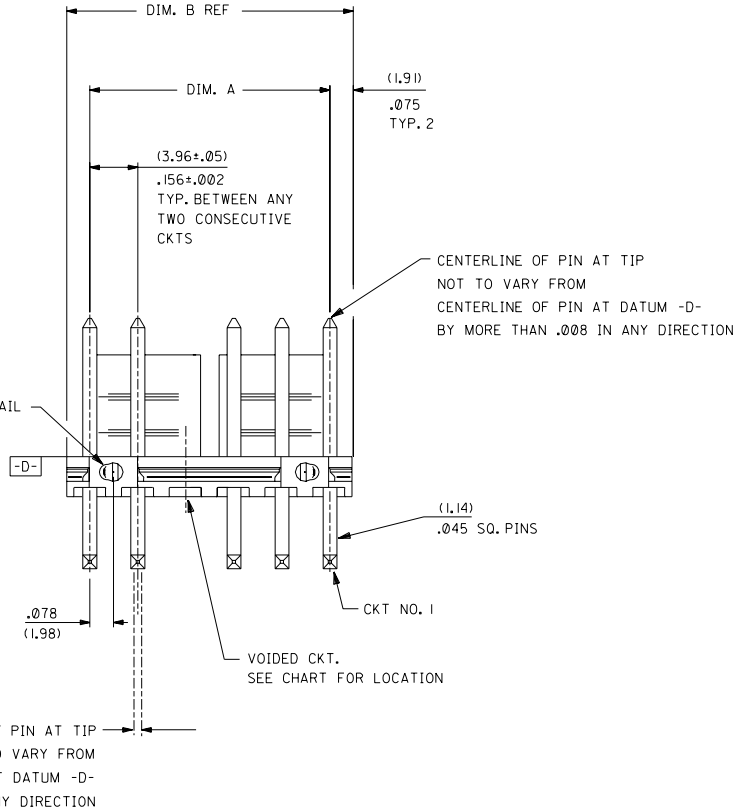

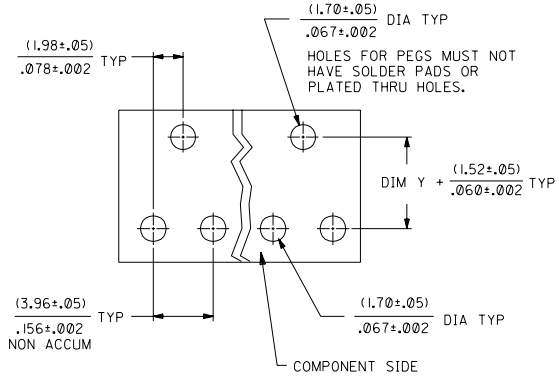

RECOMMENDED PC BOARD HOLE LAYOUT

FOR .062 THK PCB

NO. OF CKT'S.	DIM. A	DIM. B	NO. OF PEGS
2	(3.96±.05) / .156±.002	(7.77) / .306	1
3	(7.92±.08) / .312±.003	(11.73) / .462	2
4	(11.89±.08) / .468±.003	(15.70) / .618	2
5	(15.85±.10) / .624±.004	(19.66) / .774	2
6	(19.81±.10) / .780±.004	(23.62) / .930	2
7	(23.77±.10) / .936±.004	(27.58) / 1.086	2
8	(27.74±.13) / 1.092±.005	(31.55) / 1.242	2
9	(31.70±.13) / 1.248±.005	(35.51) / 1.398	2
10	(35.66±.13) / 1.404±.005	(39.47) / 1.554	2
11	(39.62±.15) / 1.560±.006	(43.43) / 1.710	2
12	(43.59±.15) / 1.716±.006	(47.40) / 1.866	2
13	(47.55±.15) / 1.872±.006	(51.36) / 2.022	2
14	(51.51±.18) / 2.028±.007	(55.32) / 2.178	2
15	(55.47±.18) / 2.184±.007	(59.28) / 2.334	2
16	(59.44±.18) / 2.340±.007	(63.25) / 2.490	2
17	(63.40±.20) / 2.496±.008	(67.21) / 2.646	2
18	(67.36±.20) / 2.652±.008	(71.17) / 2.802	2

NOTES:

1. SOLDERABILITY: WHEN PARTS ARE SOLDERED AT A TEMPERATURE OF 230°C (446°F) FOR 5 SECONDS, EACH SOLDERED SURFACE SHALL BE A MINIMUM OF 95% COVERED WITH A SMOOTH CONTINUOUS ADHERENT COATING. FOR OTHER INFORMATION SEE ES-152.
2. PIN PUSH OUT FORCE: PRIOR TO SOLDERING, A 3 POUND MINIMUM FORCE (IN EITHER DIRECTION) SHALL BE REQUIRED TO PUSH THE PIN OUT OF THE HEADER.
3. FOR ADDITIONAL INFORMATION AND TESTING PROCEDURES SEE PS-08-50.
4. PARTS ARE STACKABLE END TO END ON (3.96)/.156 CENTERS.
5. FOR PART WITHOUT PEG SEE DWG NO. SDA-41792

MATERIAL: HEADER: GLASS FILLED POLYESTER, 94V-0, MOLDED NATURAL (WHITE).

FINISH: PER ES-88
(102) OVERALL TIN: .00508 MICROMETERS MIN OVER .00254 MIN COPPER.
(208) SELECT GOLD: .00038 MICROMETERS MIN,
*SELECT TIN: .00254 MICROMETERS MIN,
OVERALL NICKEL UNDERPLATE: .00127 MICROMETERS MIN.
(228) SELECT GOLD: .00076 MICROMETERS MIN,
*SELECT TIN: .00254 MICROMETERS MIN,
OVERALL NICKEL UNDERPLATE: .00127 MICROMETERS MIN.

*THE PRIMARY SHIPPING CARTON WILL BE LABELED "COMPLIANT TO RoHS DIRECTIVE 2002/95/EC AND ELV ANNEX II OF DIRECTIVE 2000/53/EC". CARTONS WITHOUT THIS LABEL MAY CONTAIN PRODUCT WITH TIN-LEAD PLATING.

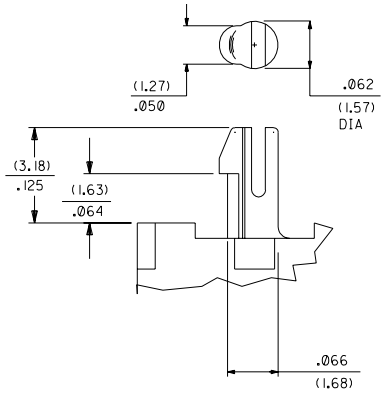

PEG DETAIL

LTR.	REVISIONS	LTR.	REVISIONS
F	LEADFREE UPDATE ucp2004-1811 3-22-04 CZUMA	D2	REL 0080/0084 UCR2000-0347 SAMIEC 99-11-11
E	ADD PACK SPEC UCR2002-0091 7/25/01 SAMIEC	D1	REL 0053/0079 UCR2000-0332 11-5-99 SAMIEC
D3	REL 0119/0133 UCR2001-0958 4/17/01 SAMIEC	D	CORRECT TYPO -001 UCR1999-0291 98-11-2 SAMIEC

DIMENSIONS SHOWN (METRIC) INCH
UNLESS OTHERWISE SPECIFIED TOLERANCES: ANGULAR ± 1/2°

	INCH	METRIC
3 PLACE	±	
2 PLACE	±	±
1 PLACE		±

DRAFT WHERE APPLICABLE MUST REMAIN WITHIN DIMENSIONS

DRWG. BY SAMIEC | CHK'D. BY PATEL
APP'D. BY LENZ | SCALE :

MFG.	SH.	REV.
3	E	
2	F	
1	F	

REVISE ONLY ON CAD SYSTEM

TITLE
FRICTION LOCK HEADER ASS'Y
.156¢ BENT SQ PIN W/PEGS
42892 SERIES DWG.

MOLEX INCORPORATED
LISLE, ILL. 60532 U.S.A.

SHEET NO. 1 OF 3 | DATE 01/15/91

PART NO. SEE CHART | DRWG. NO. SD A-42892

FILE NAME S42892X1

THIS DRAWING CONTAINS INFORMATION THAT IS PROPRIETARY TO MOLEX INC. AND SHOULD NOT BE USED WITHOUT WRITTEN PERMISSION.

DIV. C | SIZE C

42892

ENG. NO.	HEADER NO.	PIN NO.	PLATING	DIM. L	DIM. X	DIM. G GOLD	DIM. Y	DIM. Z	DIM. T TIN	DIM. W	NO OF CKTS	VOID CKTS	PACKAGING
A-42892-0019/0035	41790-0070/0086	2161-62(501)	501	(24.89) .980	(11.43) .450	( ) OVERALL	(2.82) .111	(3.30) .130	( ) N/A	90°	2-18	NONE	BULK PER PK-42492-002
A-42892-0036/0052	41790-0070/0086	2161-62(102)	102	(24.89) .980	(11.43) .450	( ) N/A	(2.82) .111	(3.30) .130	( ) OVERALL	90°	2-18	2	BULK PER PK-42492-002
A-42892-0053/0067	41790-0070/0086	2161-62(102)	102	(24.89) .980	(11.43) .450	( ) N/A	(2.82) .111	(3.30) .130	( ) OVERALL	90°	4-18	4	BULK PER PK-42492-002
A-42892-0068/0079	41790-0070/0086	2161-62(102)	102	(24.89) .980	(11.43) .450	( ) N/A	(2.82) .111	(3.30) .130	( ) OVERALL	90°	7-18	7	BULK PER PK-42492-002
A-42892-0114/0118	41790-0082/0086	2161-62(102)	102	(24.89) .980	(11.43) .450	( ) N/A	(2.82) .111	(3.30) .130	( ) OVERALL	90°	14-18	2,4,6,8,10, 14	BULK PER PK-42492-002
A-42892-0119/0133	41790-0070/0086	2161-62(102)	102	(24.89) .980	(11.43) .450	( ) N/A	(2.82) .111	(3.30) .130	( ) OVERALL	90°	4-18	2,4	BULK PER PK-42492-002

A-42892-0019/0035			A-42892-0036/0052			A-42892-0053/0067			A-42892-0068/0079			A-42892-0114/0118					
EDP NO.	ENG. NO.	NO OF CKTS	EDP NO.	ENG. NO.	NO OF CKTS	EDP NO.	ENG. NO.	NO OF CKTS	EDP NO.	ENG. NO.	NO OF CKTS	EDP NO.	ENG. NO.	NO OF CKTS	EDP NO.	ENG. NO.	NO OF CKTS
26-60-7021	A-42892-0019	2	26-62-7020	A-42892-0036	2			2			2			2			2
26-60-7031	A-42892-0020	3	26-62-7030	A-42892-0037	3			3			3			3			3
26-60-7041	A-42892-0021	4	26-62-7040	A-42892-0038	4	26-62-7041	A-42892-0053	4			4			4	42892-0119	A-42892-0119	4
26-60-7051	A-42892-0022	5	26-62-7050	A-42892-0039	5	26-62-7051	A-42892-0054	5			5			5	42892-0120	A-42892-0120	5
26-60-7061	A-42892-0023	6	26-62-7060	A-42892-0040	6	26-62-7061	A-42892-0055	6			6			6	42892-0121	A-42892-0121	6
26-60-7071	A-42892-0024	7	26-62-7070	A-42892-0041	7	26-62-7071	A-42892-0056	7	26-62-7072	A-42892-0068	7			7	42892-0122	A-42892-0122	7
26-60-7081	A-42892-0025	8	26-62-7080	A-42892-0042	8	26-62-7081	A-42892-0057	8	26-62-7082	A-42892-0069	8			8	42892-0123	A-42892-0123	8
26-60-7091	A-42892-0026	9	26-62-7090	A-42892-0043	9	26-62-7091	A-42892-0058	9	26-62-7092	A-42892-0070	9			9	42892-0124	A-42892-0124	9
26-60-7101	A-42892-0027	10	26-62-7100	A-42892-0044	10	26-62-7101	A-42892-0059	10	26-62-7102	A-42892-0071	10			10	42892-0125	A-42892-0125	10
26-60-7111	A-42892-0028	11	26-62-7110	A-42892-0045	11	26-62-7111	A-42892-0060	11	26-62-7112	A-42892-0072	11			11	42892-0126	A-42892-0126	11
26-60-7121	A-42892-0029	12	26-62-7120	A-42892-0046	12	26-62-7121	A-42892-0061	12	26-62-7122	A-42892-0073	12			12	42892-0127	A-42892-0127	12
26-60-7131	A-42892-0030	13	26-62-7130	A-42892-0047	13	26-62-7131	A-42892-0062	13	26-62-7132	A-42892-0074	13			13	42892-0128	A-42892-0128	13
26-60-7141	A-42892-0031	14	26-62-7140	A-42892-0048	14	26-62-7141	A-42892-0063	14	26-62-7142	A-42892-0075	14	42892-0114	A-42892-0114	14	42892-0129	A-42892-0129	14
26-60-7151	A-42892-0032	15	26-62-7150	A-42892-0049	15	26-62-7151	A-42892-0064	15	26-62-7152	A-42892-0076	15	42892-0115	A-42892-0115	15	42892-0130	A-42892-0130	15
26-60-7161	A-42892-0033	16	26-62-7160	A-42892-0050	16	26-62-7161	A-42892-0065	16	26-62-7162	A-42892-0077	16	42892-0116	A-42892-0116	16	42892-0131	A-42892-0131	16
26-60-7171	A-42892-0034	17	26-62-7170	A-42892-0051	17	26-62-7171	A-42892-0066	17	26-62-7172	A-42892-0078	17	42892-0117	A-42892-0117	17	42892-0132	A-42892-0132	17
26-60-7181	A-42892-0035	18	26-62-7180	A-42892-0052	18	26-62-7181	A-42892-0067	18	26-62-7182	A-42892-0079	18	42892-0118	A-42892-0118	18	42892-0133	A-42892-0133	18

LTR.	REVISIONS	LTR.	REVISIONS
	SEE SHEET 1	D2	SEE SHEET 1
	SEE SHEET 1	D1	SEE SHEET 1
	SEE SHEET 1	D	SEE SHEET 1
	SEE SHEET 1	C	SEE SHEET 1
	SEE SHEET 1	B2	SEE SHEET 1
E	SEE SHEET 1	B	SEE SHEET 1
D3	SEE SHEET 1	A	SEE SHEET 1

DIMENSIONS SHOWN (METRIC) INCH

UNLESS OTHERWISE SPECIFIED TOLERANCES: ANGULAR ± 1/2°

		INCH	METRIC
3 PLACE	±	.005	0.13
2 PLACE	±	.01	0.25
1 PLACE	±	.0	0.4

DRAFT WHERE APPLICABLE MUST REMAIN WITHIN DIMENSIONS

DRWG. BY SAMIEC | CHK'D. BY PATEL | APP'D. BY LENZ | SCALE :

▽ = 0 ▼ = 0 REVISE ONLY ON CAD SYSTEM

TITLE FRICTION LK HEADER ASSY .156℄ BENT SZ PIN W/PEG 42892 SERIES DWG

MOLEX INCORPORATED LISLE, ILL. 60532 U.S.A.

SHEET NO. 3 | DATE 12/12/91

PART NO. SEE CHART | DRWG. NO. SDA-42892

FILE NAME S42892X3

THIS DRAWING CONTAINS INFORMATION THAT IS PROPRIETARY TO MOLEX INC. AND SHOULD NOT BE USED WITHOUT WRITTEN PERMISSION.

DIV. C | SIZE C

42892