CUSTOMER TERMINAL	RoHS	LEAD(Pb)-FREE
Sn96%, Ag4%	Yes	Yes

compliant RoHS WE-MIDCOM

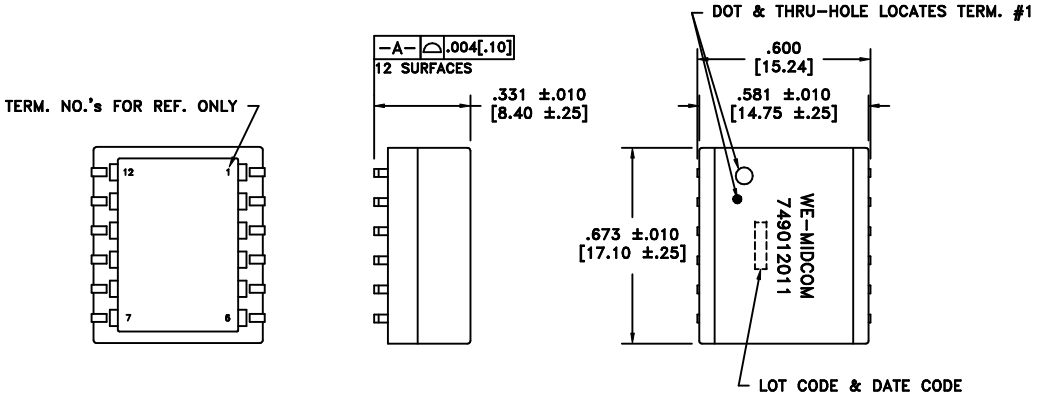

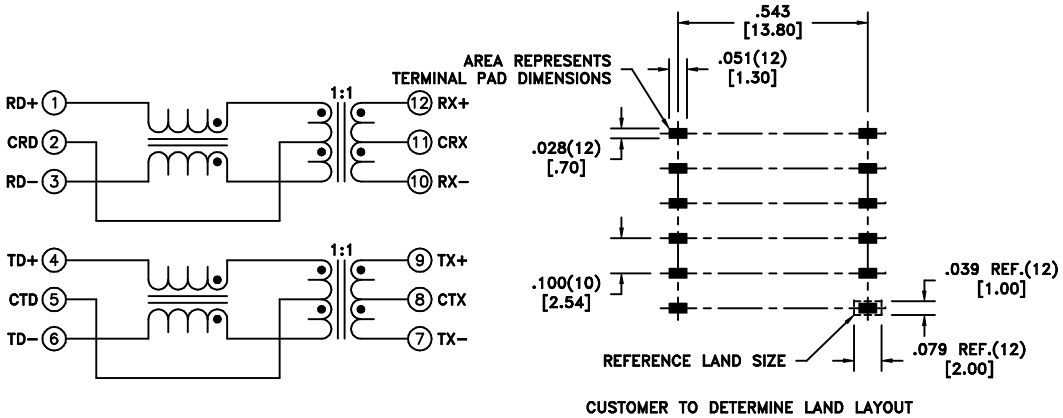

ELECTRICAL SPECIFICATIONS @ 25°C unless otherwise noted:

PARAMETER		TEST CONDITIONS	VALUE
INDUCTANCE	12-10	100kHz, 100mVAC, 24mADC, Lp	350uH min.
INDUCTANCE	7-9	100kHz, 100mVAC, 24mADC, Lp	350uH min.
DIELECTRIC	1-12	tie(1+4, 12+9), 1800Vrms, 1 second	1500Vrms, 1 minute
TURNS RATIO		(1-3):(12-10)	1:1, ±2%
TURNS RATIO		(4-6):(9-7)	1:1, ±2%
INSERTION LOSS		500k - 100MHz	-1.0dB max.
RETURN LOSS		500k - 30MHz	-18dB min.
RETURN LOSS		30M - 45MHz	-15dB min.
RETURN LOSS		45M - 60MHz	-13dB min.
RETURN LOSS		60M - 80MHz	-10dB min.
CROSSTALK		1M - 100MHz	-35dB min.
CMRR		500k - 100MHz	-33dB min.

GENERAL SPECIFICATIONS:
OPERATING TEMPERATURE RANGE: 0°C to +70°C.

Designed to comply with POE+ requirements, 720mA current capability.

COPLANARITY: All 12 terminals must lie on a plane within .004 [.10] of Surface A after lead tinning.

REV.	DATE
6A	11/07

Packaging Specifications
Method: Tape & Reel
PKG-0645
www.midcom-inc.com

Unless otherwise specified:
Tolerances: Fractions: ±1/64
Angles: ±1° Decimals: ±.005[.127]
This drawing is dual dimensioned. Dimensions in brackets are in millimeters.

DRAWING TITLE
TRANSFORMER
POE+
eiSos p/n: 749012011

Midcom WE
www.midcom-inc.com

REVISIONS: SEE SHEET 1

DRAWING NO.
749012011

SCALE ---

SHEET 2 OF 8