PLUG P50-XXXP-SXX-TGF

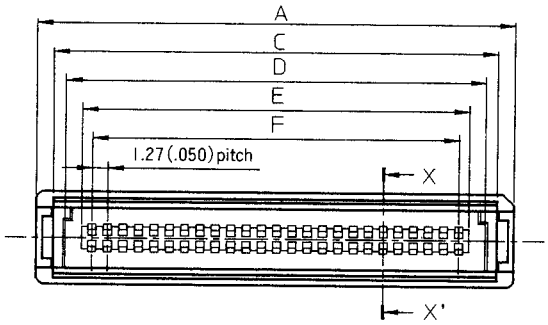

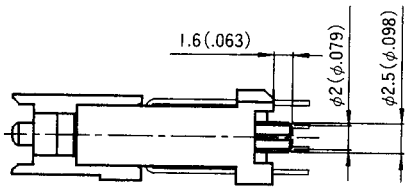

Note: Maximum withdrawal angle is 3°.

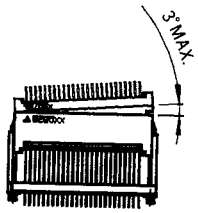

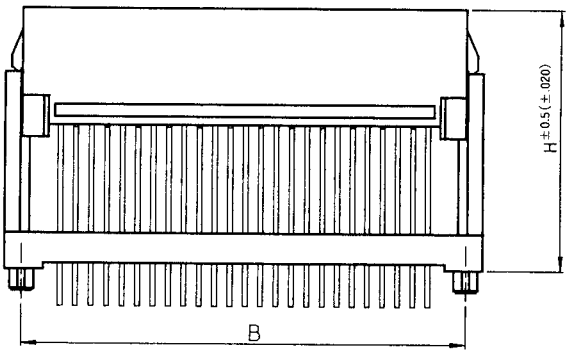

No. of Contacts	A	B	C	D	E	F
20	20.63 (.812)	17.78 (.700)	17.83 (.702)	15.83 (.623)	13.13 (.517)	11/43 (.450)
30	26.98 (1.062)	24.13 (.950)	24.18 (.952)	22.18 (.873)	19.48 (.767)	17.78 (.700)
40	33.33 (1.312)	30.48 (1.200)	30.53 (1.202)	28.53 (1.123)	25.83 (1.0174)	24.13 (.950)
50	39.68 (1.562)	36.83 (1.450)	36.88 (1.452)	34.88 (1.373)	32.18 (1.267)	30.48 (1.200)
60	46.03 (1.812)	43.18 (1.700)	43.23 (1.702)	41.23 (1.623)	38.53 (1.517)	36.83 (1.450)
80	58.75 (2.312)	55.88 (2.200)	55.93 (2.202)	53.93 (2.123)	51.23 (2.017)	49.53 (1.950)
100	71.43 (2.812)	68.58 (2.700)	68.63 (2.702)	66.63 (2.623)	63.23 (2.489)	62.23 (2.450)

All Dimensions Shown as mm (inch)

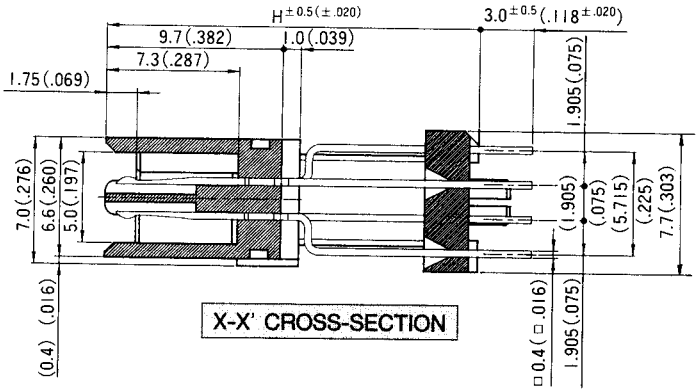

PART NUMBER	STACK HEIGHT	"H"
P50-XXXP-S20-TGF	20.00 (.787)	16.60 (.654)
P50-XXXP-S24-TGF	24.00 (.945)	20.60 (.811)
P50-XXXP-S30-TGF	30.00 (1.181)	26.60 (1.047)

PRINTED CIRCUIT BOARD LAYOUT

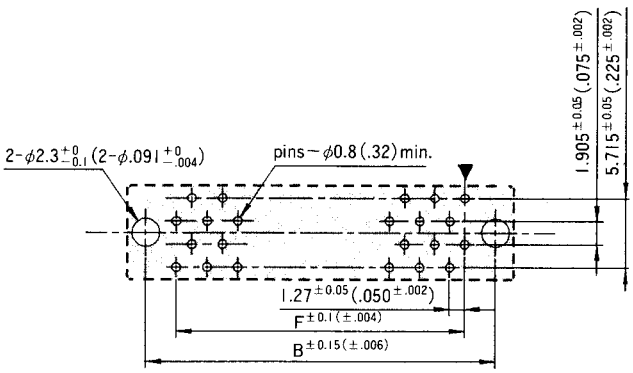

For 20•40•60•80 and 100 pins

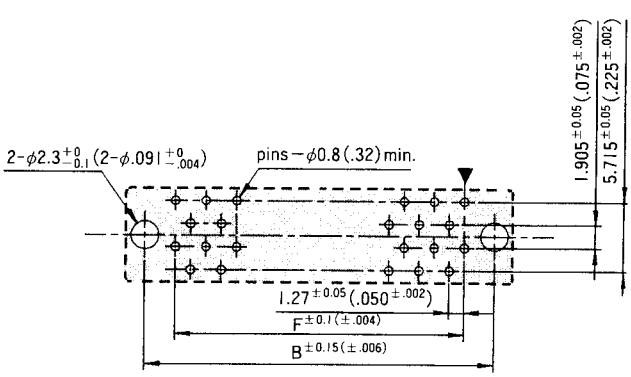

For 30 and 50 pins

Recommended Board Thickness: 1.6 ± 0.19 (.063± .008)