SPECIFICATIONS

Audio Jack Connector

DSUB POWER
3Pin, R/A,
T/H Type

Mechanical

Single Contact Separate Force: *1.5N~10N*
Contact Retention Force: *0.50kg min.*
Durability: *500 Cycles*

Electrical

Current Rating: *40A*
Contact Resistance: *2mW max.*
Dielectric Withstanding Voltage: *1000V AC/1min min.*
Insulation Resistance: *2000MW min.*

Physical

Housing: *Thermoplastic, UL 94V-0 rated*
Contact: *Copper alloy*
Plating: *See "ORDERING INFORMATION"*
Operating Temperature: *-25℃ to +85℃*
Recommended Thickness of PCB: *2.50[.984]Max.*

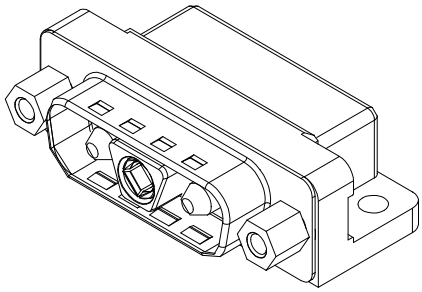

DRAWING

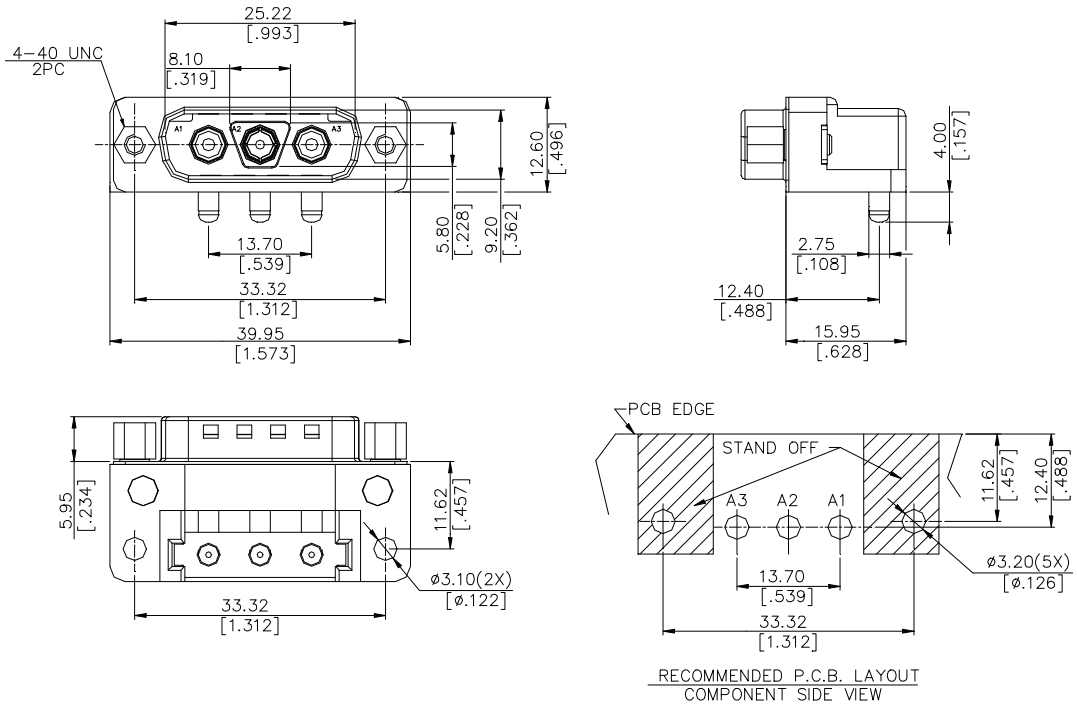

ORDERING INFORMATION

PRODUCT NO.: 4A 1 2 0 3 * - C105 - 4 F

- Power Connector
- Tail Type
  1=Through hole Solder R/A
- Contact Design Type
  2=Male & Female
- Number of all pos.
  01:1 pos.
  02:2 pos.
  ...
  99:99 pos.
- Contact Area Plating
  1=Gold Flash
  7=15u"Gold Plating
- Extension Code
- Packing Code
  4 = Tray
- Lead Free Code
  F = Lead Free

All specification & dimensions are subject to change, please call your nearest Foxconn sales representative for update information.