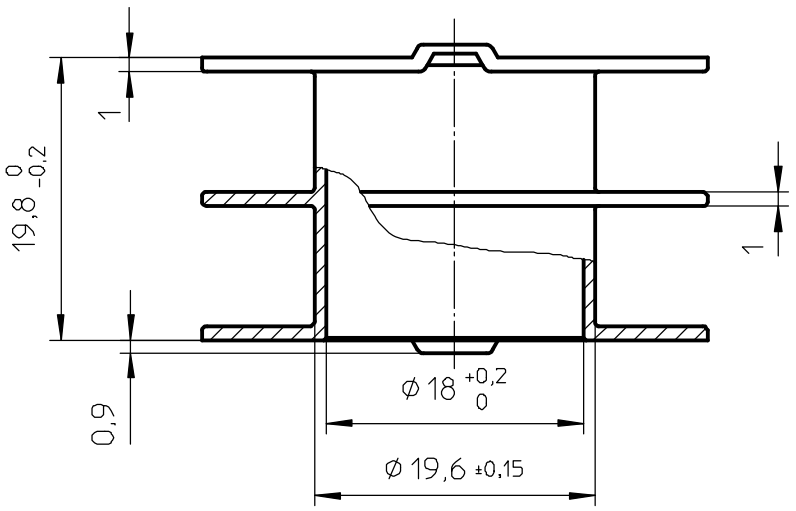

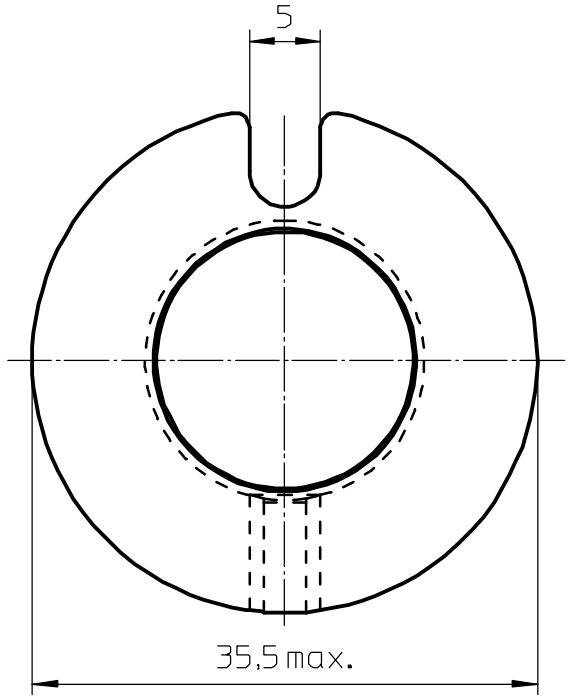

Coil former material: Zytel FR50 (PA6.6).
UL file number: E41938 - UL94V-0.
Max. operating temp.: 130°C.
Winding area: 126 mm².
Mean length of turn: 86 mm.

CLASS NO.	CP-P42/29-2S-C	4322 021 04481	03-04-29 03-07-09 04-03-12

NAME NAAM	M.Veekens	SUPERS. VERV.	1 SH SH BL BL 112 – 001	010		A4
MPA	CHECK CONTR.	DAT. 03-04-29	Property of Eigendom van	© FERROXCUBE 2000		