95040

Right Angle
Low Profile, Internal Shield

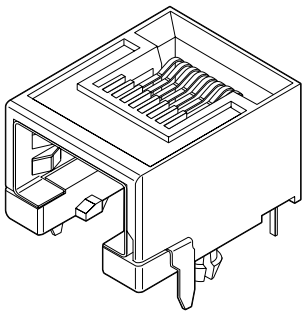

FEATURES AND SPECIFICATIONS

Features and Benefits
- High reliability, square contact
- EMI/RFI protection
- ISDN standard
- 0.10mm coplanarity

Reference Information
Product Specification: PS-95040
Packaging: Anti-static blister reel
Mates With: FCC 68 plugs
Designed In: Millimeters

Electrical
Voltage: 125V
Current: 1.5A
Contact Resistance: 20mΩ max.
Dielectric Withstanding Voltage: 1000V
Insulation Resistance: 500 MΩ min.
Shielding Effectiveness: 20 dB min.

Physical
Housing: Black polyamide, UL 94V-0
Contact: Phosphor Bronze
Plating: 1.27 to 1.52µm (50 to 60µ") Gold in contact area, 1.90µm (75µ") min. (90/10) Tin/Lead in tail area both over Nickel overall
Temperature: -40 to +80˚C

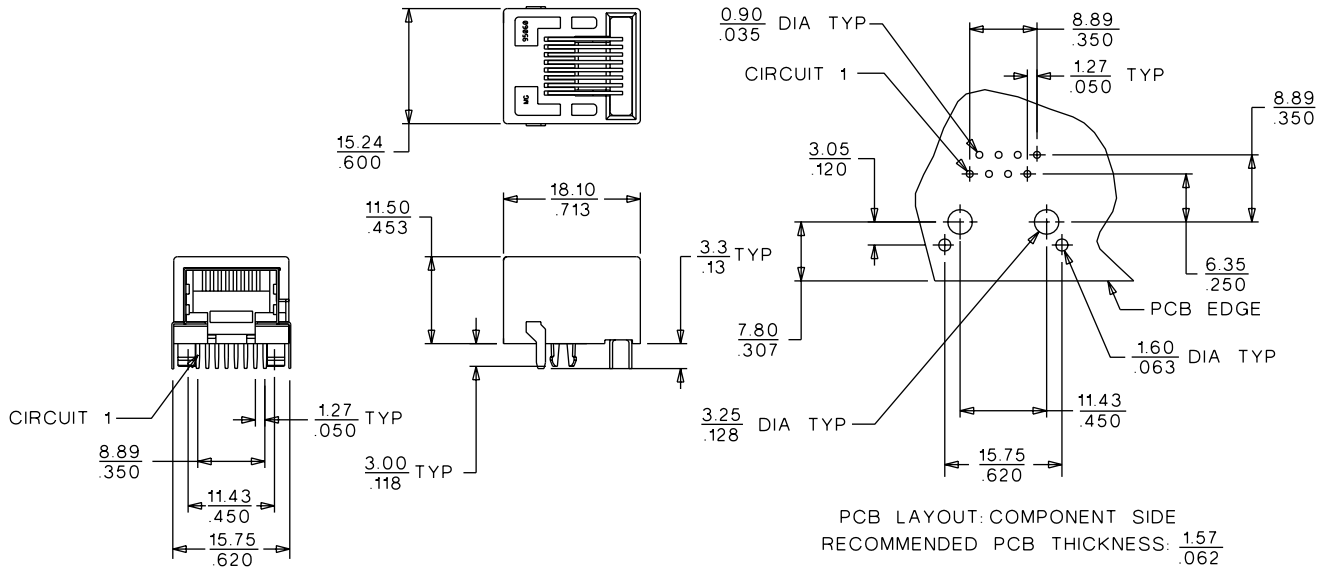

ORDERING INFORMATION

Circuits	Loaded Contacts	Order No.	Key
8	8	• 95040-2881	No

• US Standard Product, available through Molex franchised distributors