NOTES:

1. MATERIALS AND FINISHES:
   BODIES - STAINLESS STEEL, PASSIVATED
   CONTACT - BeCu, GOLD PLATING
   INSULATOR - PTFE

2. ELECTRICAL:
   A. IMPEDANCE: 75 OHM
   B. FREQUENCY RANGE: DC - 4 GHz

3. MECHANICAL:
   A. DURABILITY: 500 CYCLES MIN.
   B. TEMPERATURE RANGE: -65° C TO +100° C

4. PACKAGING:
   A. QUANTITY: SINGLE PACK
   B. MARKING: BAG TO BE MARKED
   "AMPHENOLRF, APH-NP-HDBNCJ, AND DATE CODE"

THIRD ANGLE PROJ.

REVISIONS

REV	DESCRIPTION	DATE	ECO	APPR
1	PROTOTYPE RELEASE	22-Mar-10	--	KR

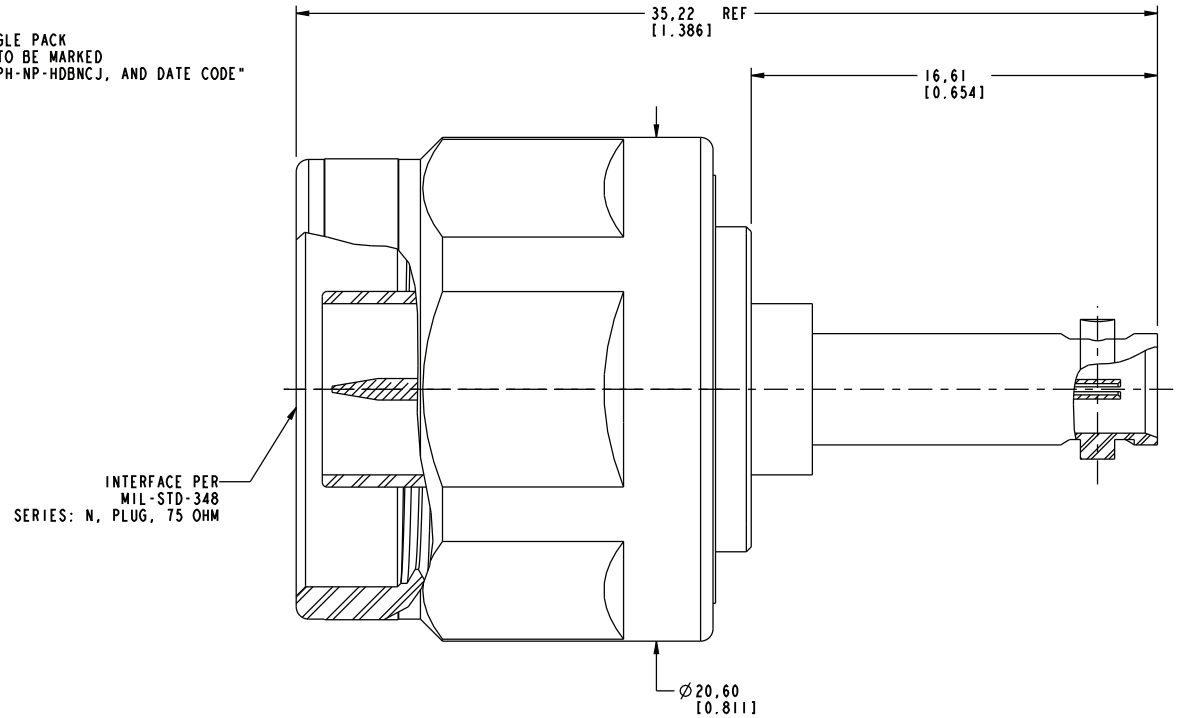

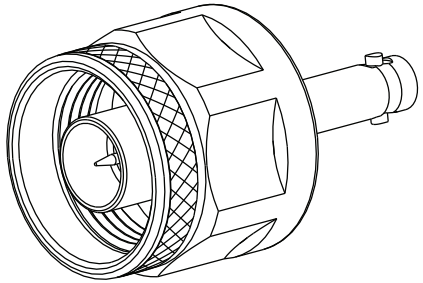

SCALE 2.500

CUSTOMER OUTLINE DRAWING

ALL OTHER SHEETS ARE FOR INTERNAL USE ONLY

UNLESS OTHERWISE SPECIFIED, DIMENSIONS ARE IN METRIC AND TOLERANCES ARE:

<0.5mm	0.5 - 6mm	6 - 30mm	30 - 120mm	ANGLES
± 0.05mm	±0.1mm	±0.2mm	± 0.3mm	±1°

NOTICE - These drawings, specifications, or other data (1) are, and remain the property of Amphenol Corp. (2) must be returned upon requiest; and (3) arre confidential and not to be disclosed to any person other than those to whom they are given by Amphenol Corp. The funishing of these drawings, specifications, or other data by Amphenol Corp., or to any other person to anyone for any purpose is not to be regarded by implicatioin or otherwise in any manner licensing, granting rights to permitting such holder or any other sperson to manufacture, use or sell any product, process or design, patented or otherwsie, that may in any way be related to or disclosed by said drawings, specifications, or other data.

MATERIAL: SEE NOTES

REFERENCE: EAR #4100

CONFIGURATION LEVEL: Prototype

FINISH

DRAWN: KARTHIK R — DATE: 22-Mar-10

ENGINEER: KARTHIK R — DATE: 22-Mar-10

APPROVED — DATE

CAD FILE: Root Folder/HD-BNC/APH-NP-HDBNCJ

TITLE: ADAPTOR, 75 OHM N PLUG TO HD BNC JACK

SCALE: 5.0:1.0 | SHEET 2 OF 2

DWG SIZE: B | REV: 1

Amphenol RF
Danbury CT USA, Tainan, Taiwan, Shenzhen, China
www.amphenolrf.com

DRAWING NO. APH-NP-HDBNCJ

ITEM NO. APH-NP-HDBNCJ

PART NO. APH-NP-HDBNCJ