multimec® 3F+1N

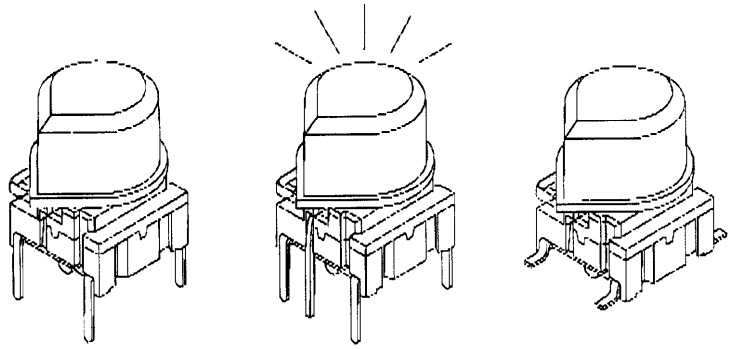

Technical Data:

- through-hole or SMD
- 50mA/24VDC
- single pole/momentary
- 10.000.000 operations life time
- IP67 sealing
- temperature range:
  low temp: -40/+115°C
  high temp: -40/+160°C

Dimensions (through-hole)

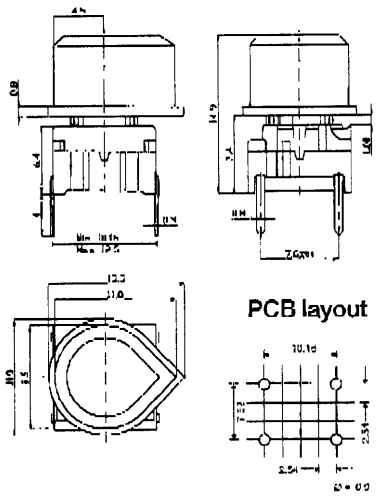

Dimensions (w/LED)

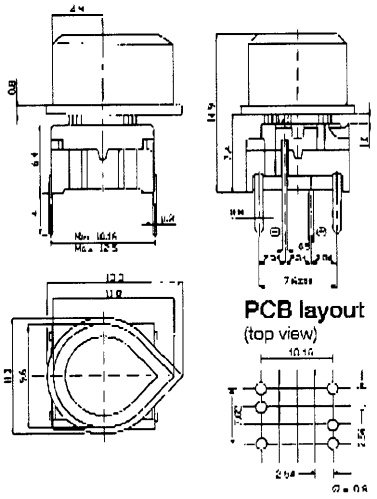

Dimensions (SMD)

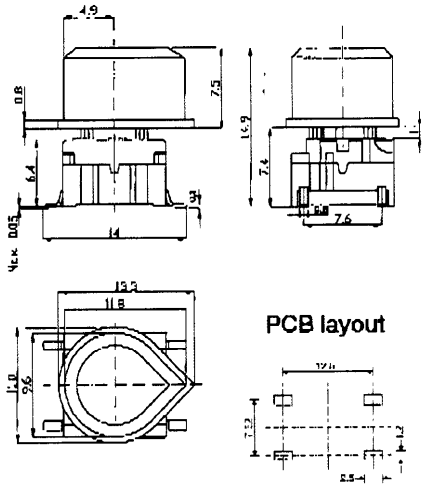

8 different position options

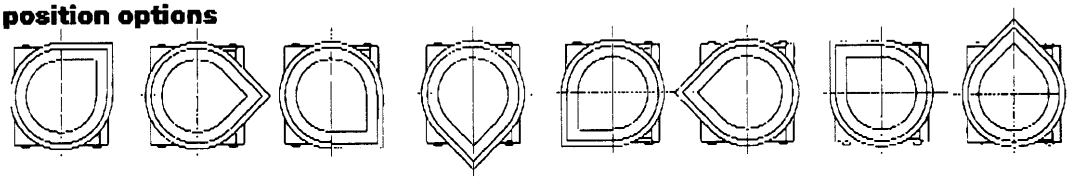

HOW TO ORDER

3 F	[ ]	[ ][ ]	+	[ ][ ]	[ ][ ]
Switch	**Mounting** **T** through-hole **S** surface mount	**L 6** low temp. **H 9** high temp.		**Cap** **1N**	**00** blue **03** grey **04** yellow **08** red **09** black custom colours on request

Standard versions:
3FTL6, 3FTH9, 3FSH9

3 F	T	[ ][ ]	[ ][ ]	+	[ ][ ]	[ ][ ]
Switch	**Mounting** **T** through-hole	**L 6** low temp. **H 9** high temp.	**LED** **00** blue **20** green **2040** green/yellow **40** yellow **80** red **8020** red/green **8040** red/yellow		**Cap** **1N**	**10** transparent blue **12** transparent green **14** transparent yellow **16** transparent white **18** transparent red

Standard versions:
3FTL620, 3FTL640, 3FTL680

Combinations of high temperature switches with LEDs will be limited by the temperature capability of the LED.

Ordering example: 3FTL6 +1N09 or 3FTL680 +1N18

mec . Industriparken 23 . P.o. Box 26 . DK-2750 Ballerup . Denmark
Tel.: +45 44 97 33 66 . Fax: +45 44 68 15 14 . Web: http://www.mec.dk. E-mail: danmec@mec.dk