HONGFA RELAY

	MINIATURE POWER RELAYS 30A 1 POLE PC BOARD TYPE	JQX-105F-5

UL/CUR File No. : E134517

- **30A switching capabilities**
- **PCB coil terminals, ideal for heavy duty load**
- **4KV dielectric coil to contacts**
- **Heavy load up to 7,200VA**
- **Open, Sealed & Unsealed type available**
- **Ambient Temp.**

Class B: DC: -55 to +85 °C; AC: -55 to +60 °C

Class F: DC: -55 to +105 °C; AC: -55 to +85 °C

■CONTACT DATA

Contact Form	1 FORM A (NO)	1 FORM B (NC)	1 FORM C (NO)	1 FORM C (NC)
Initial Contact Resistance	50m Ω, Max. (measured at 1A 24VDC)			
Contact Material	Silver Alloy			
UL Rating	30A 277VAC	15A 277VAC	20A 277VAC	10A 277VAC
	30A 28VDC		20A 28VDC	10A 28VDC
	2HP 250VAC		2HP 250VAC	1/4HP250VAC
	1HP 125VAC		1HP 250VAC	1/2HP 125VAC
JQX-105F-5 Rating	30A 240VAC	15A 240VAC	20A 240VAC	10A 240VAC
	20A 28VDC	10A 28VDC	20A 28VDC	10A 28VDC
JQX-105F- 5L Rating	25A 240VAC	15A 240VAC	20A 240VAC	10A 240VAC
	20A 28VDC	10A 28VDC	20A 28VDC	10A 28VDC
Switching Capacity	7200VA/ 560W	3600VA/280W	4800VA / 560W	2400VA/ 280W
Switching Current	Max 30A	Max 15A	Max 20A	Max 10A
Switching Voltage	Max. 277VAC / 28VDC			
Electrical Life	1×10^5 OPS min.			
Mechanical Life	1×10^7 OPS min.			

■ SPECIFICATION

Insulation Resistance	1,000MΩ 500VDC
Dielectric Strength Between coil and Contacts:	2,500VAC 1minute **T: 4,000VAC**, 1 minute
Between open contacts:	1,500VAC 1minute
Operate Time	15 ms
Release Time	10ms
Ambient Temperature	AC:-55 to +60°C DC:-55 to +85°C
Humidity	98 % +40 °C
Vibration Resistance	DA:1.5mm10 to 55Hz
Shock Resistance	98 m/s^2 Malfunction 980m/s^2 Mechanical
Dimension (mm)	See Outline Dimensions
Weight	approx. 36 g
Termination	PCB and QC
Construction	Open,Sealed Unsealed

■ COIL DATA

Coil Consumption	Coil Voltage	Coil Resistance
DC: 0.9W AC: 2VA	5 to 110 VDC 12 to 277VAC	see table below

■TABLE

Nominal Voltage	Pick-up Voltage	Drop-Out Voltage	Coil Resis. Ω±10%	Nominal Voltage	Pick-up Voltage	Drop-Out Voltage	Coil Resis. Ω±10%
5 VDC	3.75	0.5	27	**18 VDC**	13.50	1.8	380
6 VDC	4.50	0.6	40	**24 VDC**	18.00	2.4	660
9 VDC	6.75	0.9	97	**48 VDC**	36.00	4.8	2560
12 VDC	9.00	1.2	155	**70 VDC**	52.50	7.0	5500
15 VDC	11.25	1.5	256	**110 VDC**	82.50	11.0	13450

* When requiring DC pull-in voltage <75% of nominal voltage, special order allowed.

■TABLE

Nominal Voltage	Pick-up Voltage	Drop-Out Voltage	Coil Resis. Ω±10%	Nominal Voltage	Pick-up Voltage	Drop-Out Voltage	Coil Resis. Ω±10%
12 VAC	9.6	2.4	25	**208 VAC**	166.4	41	11000
24 VAC	19.2	4.8	100	**240 VAC**	192	48	13490
120 VAC	96.0	24.0	2500	**277 VAC**	220	54	15000

* When requiring AC pull-in voltage <80% of nominal voltage, special order allowed.

■ORDER DESIGNATION

JQX-105F-5	/	018	D	T	-	1H	S	F
Model		Coil Volt.	Coil Input	**T:** Dielectric strength between Coil and contact: 4000VAC		Contact Form	Structure	F: Class F
Without F: Open		DC: 5 to 110V	D:DC	,**Nil:** 2500VAC		1H: NO	NIL: Cover	Nil: Class B
L: 25A		AC:12 to 277V	A:AC			1D: NC	S: Sealed	
NIL: 30A						1Z: SPDT		

■ OUTLINE DIMENSIONS ,WIRING DIAGRAM AND PC BOARD LAYOUT

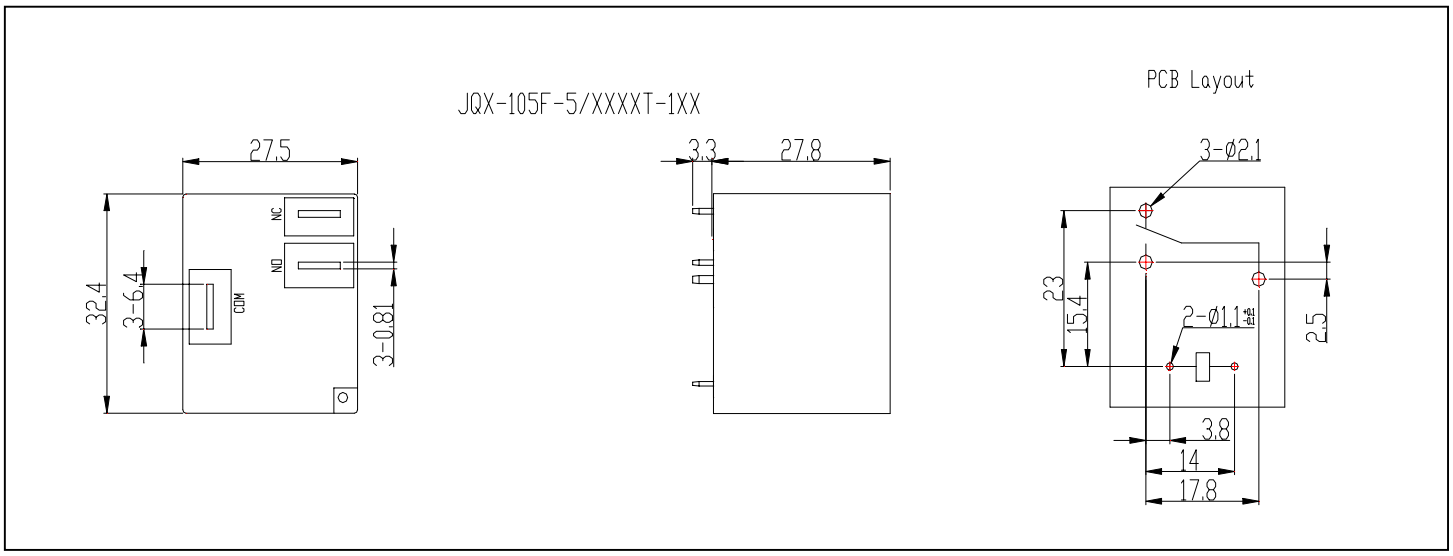

■ USEFUL CURVES