SHEET OF

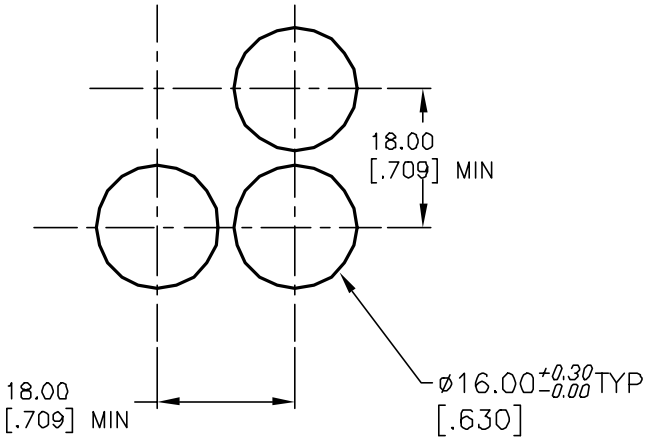

RECOMMENDED PANEL LAYOUT

a-(L)-b (+)

CONTACT CONFIGURATION

Item	Qty.	Dwg. No.	Part No.
1	1	F040002	L16 PLS10
2	1	F050424	50-004-24 YEL L.E.D.
3	1	F050316	50-003-16 YEL LENS TRANSPARENT

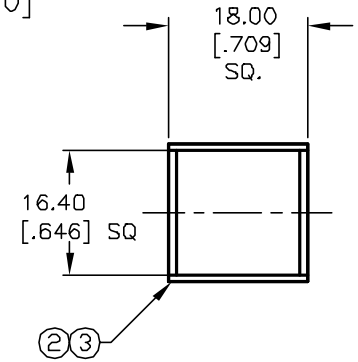

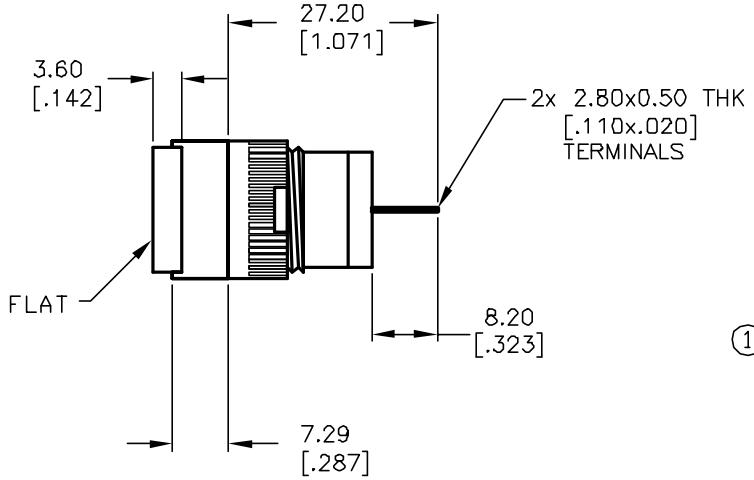

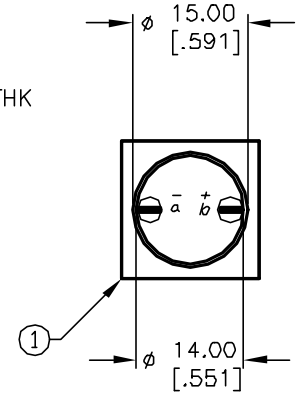

NOTES:

1. ALL DIMENSIONS IN MM [INCH]
2. GENERAL TOLERANCE: X.X=±0.4
   X.XX=±0.25
3. TERM. NOS. FOR REFERENCE ONLY.
4. RATING: 5A @250V AC
   8A @125V AC
   LAMP VOLTAGE: 24V DC LED
5. MECHANICAL LIFETIME: >2 MILLION OPERATIONS
6. CONTACT MATERIAL: COPPER ALLOY W/SILVER PLATING

REV.	ECN No.	DESCRIPTION	DATE	CHKD
A	12439	RELEASED FOR PRODUCTION	9/20/02	CB

THE INFORMATION CONTAINED IN THIS DOCUMENT IS PROPRIETARY TO E-SWITCH AND IS NOT TO BE COPIED OR TRANSFERRED

E-SWITCH®

TITLE L16 PL S10 K YEL YEL

SCALE	DATE	DR	DWG	REV
1:1	9/20/02	CB	XF0506P	A