MTD2003G

Dual Full-bridge PWM Stepper Motor Driver

Features

- ●Dual full bridge for a bipolar stepper motor driver
- ●Output current 1.2A , Output voltage 35V
- ●Constant current control(fixed frequency PWM control)
- ●2-bit digital current selection
- ●Noise cancellation function
- ●Built-in flywheel and flyback diodes
- ●Cross conduction protection
- ●Thermal shutdown with hysteresis
- ●Surface mount package with heat sink(HSOP24)

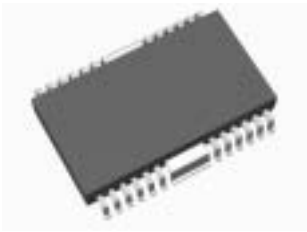

HSOP24

■Absolute maxmum ratings / Ta=25°C

Parameter	Symbol	Rating	Unit
Output voltage	Vmm	35	V
Output current	I_{OUT}	1.2	A
Logic supply	Vcc	0～6	V
Logic input	V_{LOGIC}	0～Vcc	V
Allowable power dissipation *	P_D	2.1	W
Storge temperature range	Tstg	-40～150	°C
Maximum Junction temperature	Tj	150	°C

*50.8×50.8×1mm³ Glass Epoxy Board(FR4),200mm² Cupper Pattern

■Pin Assignment

MTD2003G TOP VIEW

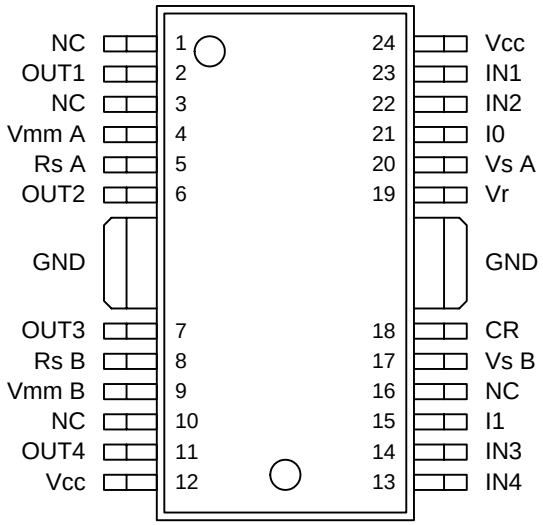

■Truth table

IN 1 or 4	IN 2 or 3	OUT 1 or 4	OUT 2 or 3
L	L	OFF	OFF
L	H	L	H
H	L	H	L
H	H	OFF	OFF

I0	I1	Output current ratio[%]	Vref[V] (at Vr=5V)
L	L	100	0.50±5%
H	L	70	0.35±8%
L	H	33	0.17±10%
H	H	0	-

■Electrical Characteristics

Vcc=5V , Ta=25°C unless otherwise specified

Parameter	Symbol	Condition	MIN	TYP	MAX	Unit
●Output stage						
Upper transistor saturation voltage	$V_{CE(sat)}H$	I_C=1.0A	-	1.2	1.4	V
Lower transistor saturation voltage	$V_{CE(sat)}L$	I_C=1.0A	-	0.7	1.0	V
Upper transistor leak current	IrH	Vmm=30V, V_{OUT}=0V	-	-	10	μA
Lower transistor leak current	IrL	V_{OUT}=30V, V_{RS}=0V	-	-	10	μA
Uppre diode forward drop	$V_F H$	I_F=1.0A	-	1.4	1.6	V
Lower diode forward drop	$V_F L$	I_F=1.0A	-	1.3	1.5	V
●Logic stage						
Logic supply current (2circuit ON)	$I_{CC(ON)}$		-	50	65	mA
Logic supply current (2circuit OFF)	$I_{CC(OFF)}$	V_{IN}=all 0V or all 5V	-	15	25	mA
IN "H" input voltage	$V_{IN}H$		2.3	-	Vcc	V
IN "L" input voltage	$V_{IN}L$		GND	-	0.6	V
IN "H" input current	$I_{IN}H$	V_{IN}=3.3 or 5V	-	-	10	μA
IN "L" input current	$I_{IN}L$	V_{IN}=0V	-	-3	-20	μA
I0,I1 "H"input voltage	$V_{I0/I1}H$		2.3	-	Vcc	V
I0,I1 "L"input voltage	$V_{I0/I1}L$		GND	-	0.6	V
I0,I1 "H"input current	$I_{I0/I1}H$	$V_{I0/I1}$=3.3 or 5V	-	-	10	μA
I0,I1 "L"input current	$I_{I0/I1}L$	$V_{I0/I1}$=0V	-	-75	-100	μA
Vr input current	Iref	Vr=5V	-	500	650	μA
Vs input current	Is	Vs=0V	-	-1	-10	μA
Comparator threshhold (100%)	Vs1	Vr=5V, V_{I0}=0V, V_{I1}=0V	0.475	0.5	0.525	V
Comparator threshhold (70%)	Vs2	Vr=5V, V_{I0}=5V, V_{I1}=0V	0.322	0.35	0.378	V
Comparator threshhold (33%)	Vs3	Vr=5V, V_{I0}=0V, V_{I1}=5V	0.153	0.17	0.187	V
Chopping frequency	f_{CHOP}		-	20	-	kHz
Blanking time	tb	Ct=3300pF	-	1.55	-	μs
Thermal shutdown temperature	T_{TSD}		-	150	-	°C

■Recommended operation conditions

Parameter	Symbol	Recommendation	Unit
Junction temperature	Tj	-25～120	°C
Logic supply	Vcc	4.75～5.25	V
Load supply	Vmm	～31	V

■Thermal resistance

Symbol	Rating	Unit
θja	58	°C/W

*50.8×50.8×1mm³ Glass Epoxy Board(FR4),200mm² Cupper Pattern

■Block diagram / Typical application

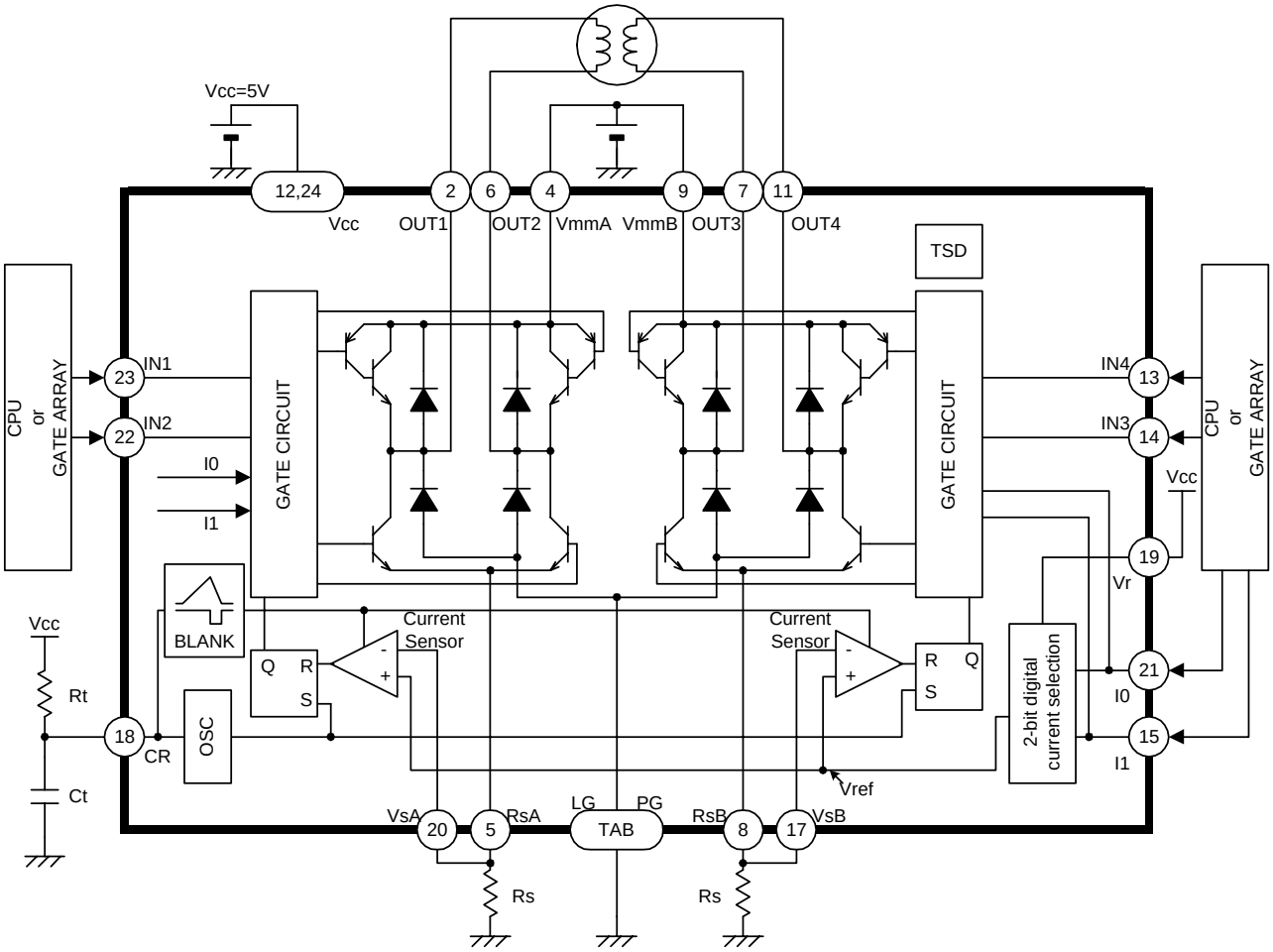

●Constant chopping current level

$$Ichop = \frac{Vr}{10 \times Rs} - 0.015$$

●Recommended component values

Symbol	Recommended component values	Unit
Rt	18	kΩ
Ct	3300	pF
Vr	Vcc	V

●ONE SHOT OFF TIME

$$f = \frac{1}{0.72 \times Ct \times Rt}$$

■Outline Drawing

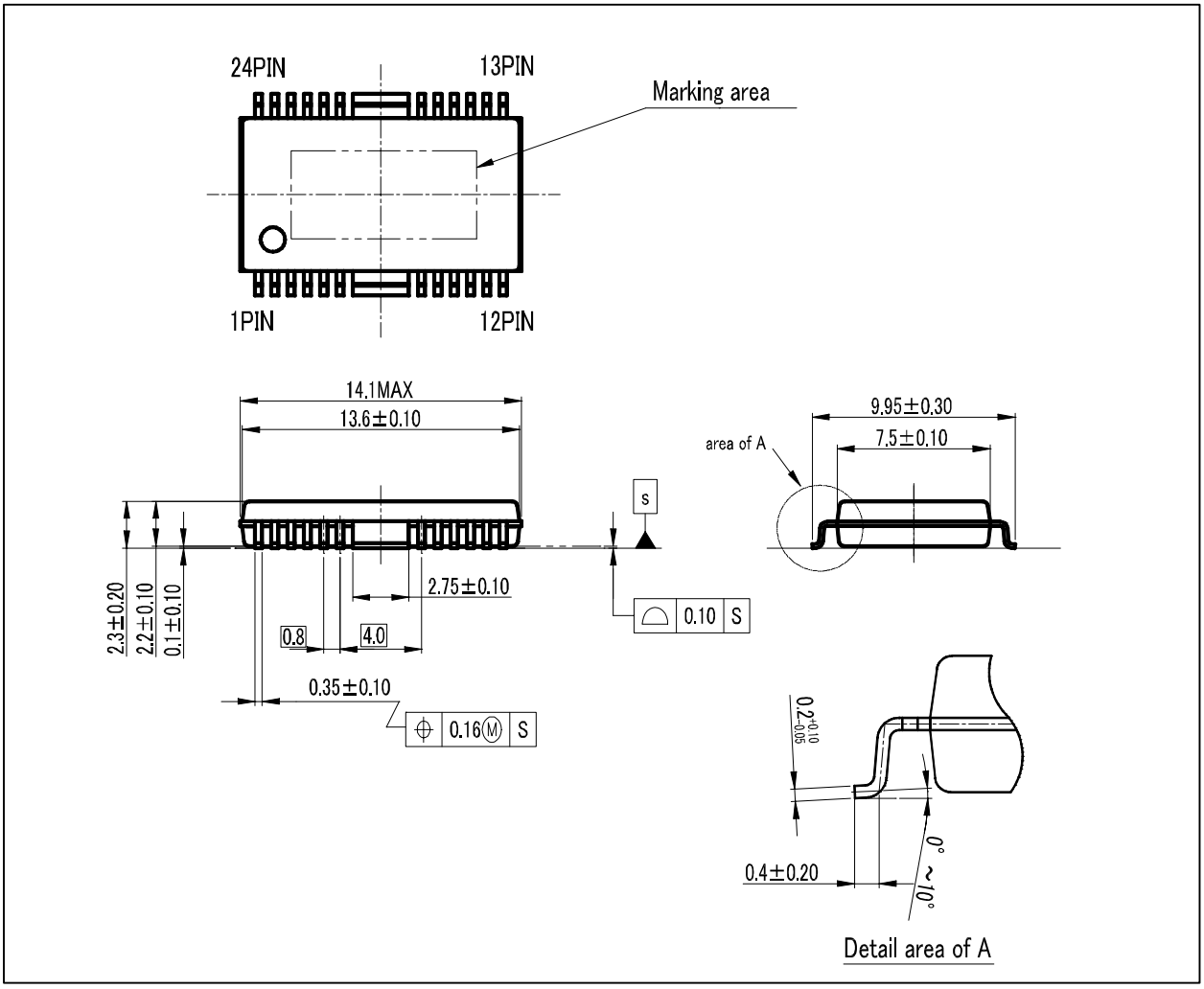

(Unit : mm)

⚠ Although we are constantly making every effort to improve the quality and reliability of our products, there nevertheless remains a certain probability that the semiconductor products may occasionally fail or malfunction. Please take careful precautions against product failures or malfunctions to avoid any injuries, fire accidents or social loss by implementing safety designs such as redundancy designs, designs for fire spread prevention, and designs for preventing malfunctions.

⚠ Our semiconductor products listed in this document are not designed or manufactured to be used in devices or systems requiring extremely high levels of quality and reliability, or the failure or malfunction of which may directly threaten human lives or cause injury. In the cases where the products are to be used in devices or systems for special applications or devices or systems for specialized applications shown below, always make sure to consult us in advance.

Special Applications
Transportation devices (automotive, marine, etc.), communication devices for core network, traffic signal devices, fire prevention/anticrime devices, various safety devices, medical devices, etc.

Specialized Applications
Nuclear power control systems, aircraft and aerospace devices, submarine relay devices, and systems for preserving life, etc.

Even if it is not for a special or specialized application, when IC products are to be used for devices or systems that are desired to last for a long period under continuous operation, please make sure to consult our sales representative in advance.