Ø 13,78” x 10,787” Ø 350 x 274 mm

Series 60C

ETRI®

AC High Performance Fans

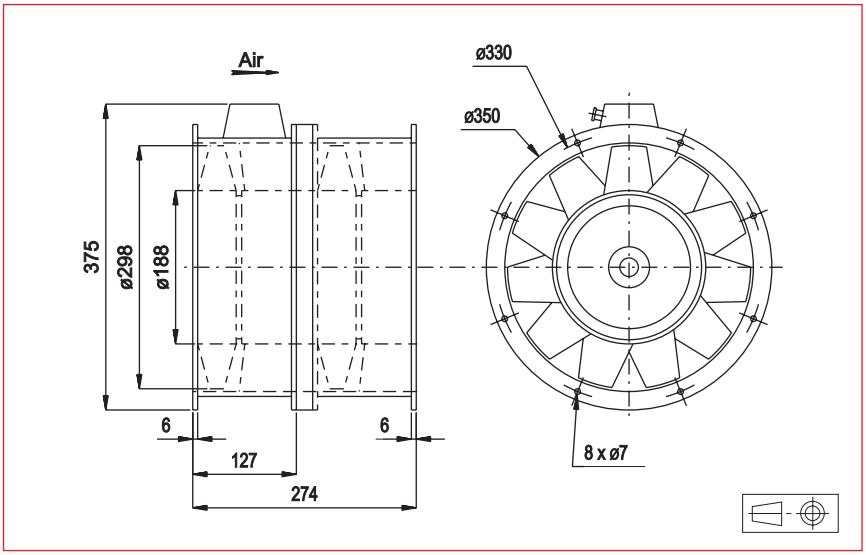

Approvals

CE

AC Motor

Housing material: aluminium
Impeller material: aluminium
Weight: 20,25 kg
Bearing system: ball bearings

Available with:

- Safety switch

Life expectancy

L-10 LIFE AT 40°C:
25 000 hours

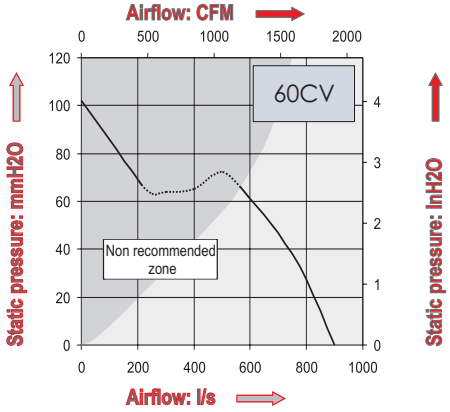

Part Number	Nominal voltage	Airflow	Noise level	Nominal speed	Frequency	Phases	Capacitor (not included)	Input power	Nominal Current	Starting Current	Connection type		Operating temperature	
	V	l/s	dB(A)	RPM	Hz		µF	W	mA	mA	Leads	Terminals	Min.°C	Max.°C
60CV216DC13	220	900	87	2800	50	3		640	2200	14000		X	-10	70
	380	900	87	2800	50	3		640	1300	8000		X	-10	70

Additional versions:
Salt spray protected - Shock and vibration protected - Marine specifications
Wide temperature range - Other voltages (consult factory)

Accessories:
Refer to Accessories leaflet