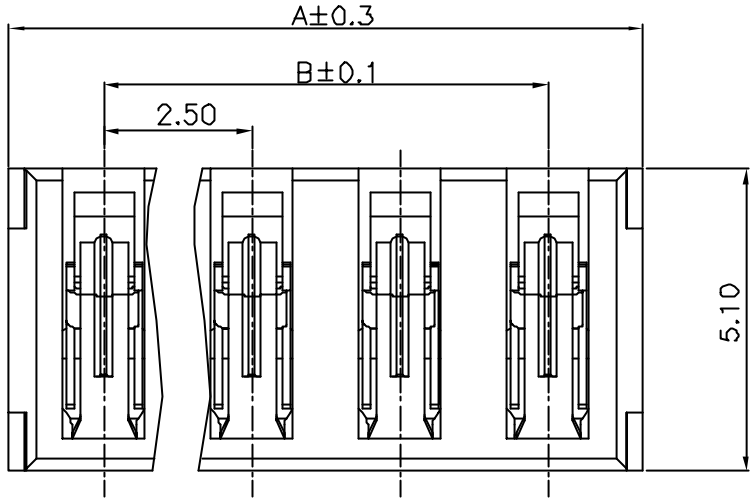

Recommended P.C.B. Layout (Component Side)

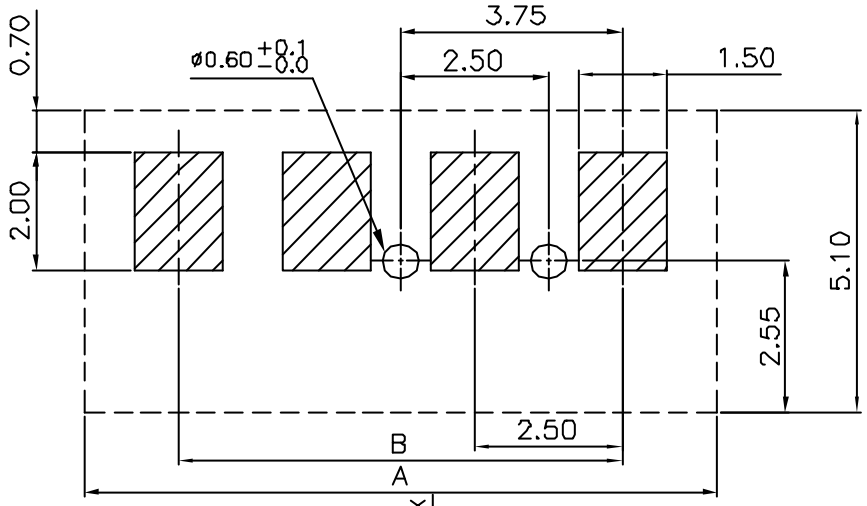

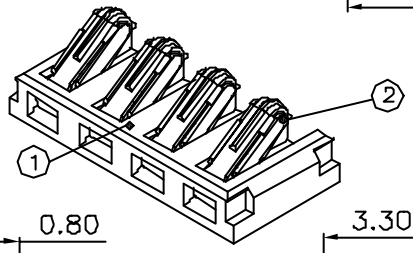

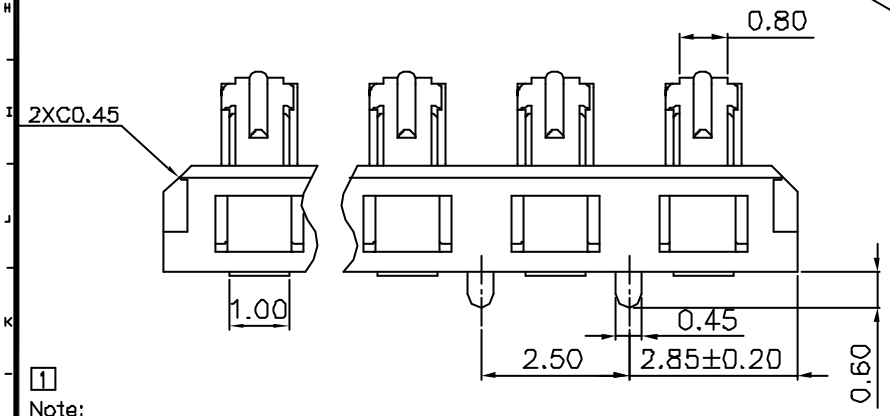

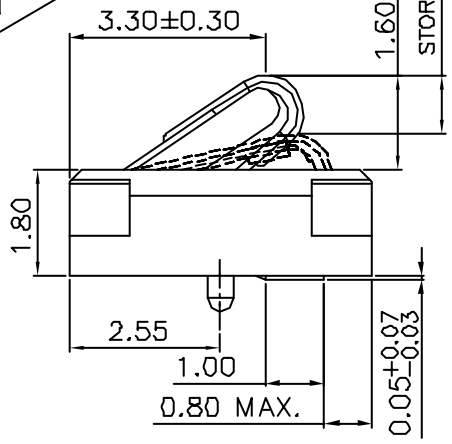

Dimension Information

SUYIN P/NO.	DIM. A	DIM. B
250040MA002G300ZR	5.70	2.50
250040MA003G300ZR	8.20	5.00
250040MA004G300ZR	10.70	7.50
250040MA005G300ZR	13.20	10.00

NO.	DESCRIPTION	MATERIAL	COLOR	REMARK
4				
3				
2	TERMINAL	BRASS	——	Glod Plated
1	HOUSING	High Temp. Plastic	BLACK	UL94V-0

1

Note:

* 250040MAXXXG300ZR two pins item without location peg.
* 250040MAXXXG300ZR 兩Pin無定位柱

ECN (DCN) NO.	REV	DATE	DESCRIPTION	CHANGE	APPRO.
——	0		NEW	——	——

Angle	±2°
30 ~	±0.50
10 ~ 30	±0.30
~ 10	±0.15

GENERAL TOLERANCE UNLESS OTHERWISE NOTED

DRAW		
DESIGN		
CHECK		
APPRO.		

SUYIN CONNECTOR

CUSTOMER COPY | TITLE: 2.5mm Pitch Battery Connector

PART NO.	250040MAXXXG300ZR
PART NO. (OLD)	——
DRAWING NO. D ING	250040MAXXXG300ZR
SCALE 8:1	UNIT mm	A4

031106-75