LUCKY LIGHT

GB-254 SERIES
Round Type
LED Lamps (3.1mm)

DESCRIPTION:

The 254 series is widely used in general purpose indicator applications with 3.1mm diameter package.
The semi-conductor materials used are:
GaP for (254HD/HT, 254GC/GD/GT)
GaAsP/GaP for (254RHC/RHD/RHT, 254YC/YD/YT and 254SD)

PACKAGE DIMENSIONS

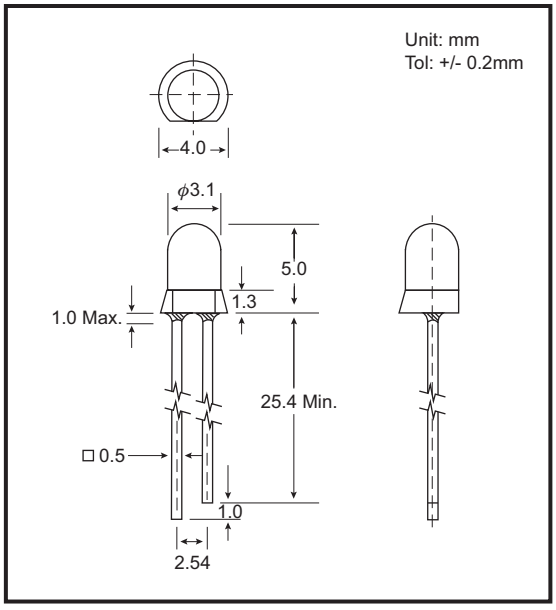

ABSOLUTE MAXIMUM RATINGS: (Ta=25°C)

Reverse Voltage	5 Volt
Reverse Current (Vr =5V)	100µA
Operating Temperature Range	-40°C To 85°C
Storage Temperature Range	-40°C To 100°C
Lead Soldering Temperature (1.6mm (1/16)From Body)	260°C For 5 Seconds

NOTES : 1. All dimensions are in millimeters.
2. Lead spacing is measured where the leads emerge from the package.
3. Protuded resin under flange is 1.5 mm (0.059") Max.
4. Specifications are subject to change without notice.

PART NO. SELECTION AND APPLICATION INFORMATION (RATINGS AT 25°C AMBIENT)

Part No.	Emitted Color	Lens Color	Peak Wavelength λp (nm)	Vf (v) Min	Vf (v) Max	Rec. If (mA).	Iv (mcd) Min	Iv (mcd) Typ.	View Angle $2\theta_{1/2}$(Deg)
GB-254HD	Red	Red Diffused	697	1.7	2.6	5-10	0.5	1.6	40
GB-254RHD	Bright Red	Red Diffused	660	1.7	2.6	10-20	1.1	6.0	40
GB-254GD	Green	Green Diffused	565	1.7	2.6	10-20	1.1	6.0	40
GB-254YD	Yellow	Yellow Diffused	585	1.7	2.6	10-20	1.1	6.0	40
GB-254SD	Orange	Orange Diffused	610	1.7	2.6	10-20	1.1	6.0	40
GB-254HT	Red	Red Trans.	697	1.7	2.6	5-10	2.5	1.0	20
GB-254RHT	Bright Red	Red Trans.	660	1.7	2.6	10-20	3.5	17.0	20
GB-254GT	Green	Green Trans.	565	1.7	2.6	10-20	3.5	17.0	20
GB-254YT	Yellow	Yellow Trans.	585	1.7	2.6	10-20	3.5	17.0	20
GB-254RHC	Bright Red	Water Clear	660	1.7	2.6	10-20	3.5	17.0	20
GB-254GC	Green	Water Clear	565	1.7	2.6	10-20	3.5	17.0	20
GB-254YC	Yellow	Water Clear	585	1.7	2.6	10-20	3.5	17.0	20

TESTING CONDITION FOR EACH PARAMETER :

PARAMETER:	SYMBOL	UNIT	TEST CONDITION
REVERSE VOLTAGE	Vr	VOLT	Vr = 5.0 Volt
REVERSE CURRENT	Ir	µA	If = 20mA
FORWARD VOLTAGE	Vf	VOLT	If = 20mA
LUMINOUS INTENSITY	Iv	MCD	If = 20mA
VIEWING ANGLE	$2\theta_{1/2}$	DEGREE	
RECOMMENDED OPERATING CURRENT	If (Rec)	mA	

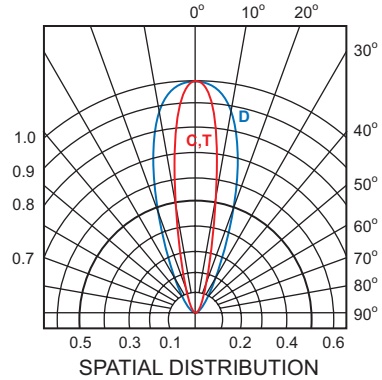

SPATIAL DISTRIBUTION