# ISDN S-INTERFACE ISOLATION TRANSFORMER
## P/N: BH-S5798

- **SURFACE MOUNT, DUAL**
- **MEET THE PULSE WAVEFORM TEMPLATE OF CCITT 1.430 WHEN RECOMMENDED TRANSFORMER AND CHIP PAIR IS USED.**
- **2KVRMS ISOLATION VOLTAGE.**
- **EXCELLENT LONGITUDINAL BALANCE**
- **REEL TAPE OR TUBE PACKAGING.**

## ELECTRICAL SPECIFICATIONS @25ºC

| Ratio (± 2%) | | OCL Pri (mH min) | LL sec (μ H MAX) | | Cw/w (pF MAX) | CD pri (pF MAX) | | DCR pri (Ω±25%) | | DCR sec (Ω±25%) | | idc (E) (mA MAX) |
|---|---|---|---|---|---|---|---|---|---|---|---|---|
| A | B | A & B | A | B | A & B | A | B | A | B | A | B | |
| 1:2.5 | 1:2.5 | 22 | 8-40 | 8-40 | 100 | 110 | 110 | 2.5 | 2.5 | 5.8 | 5.8 | 1 |
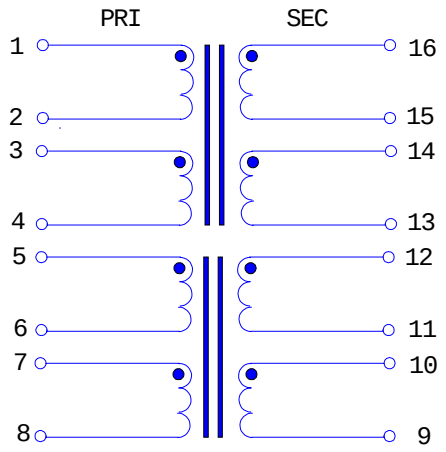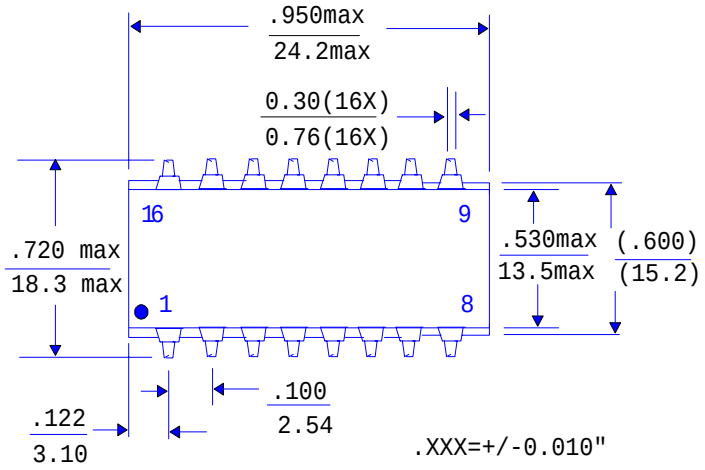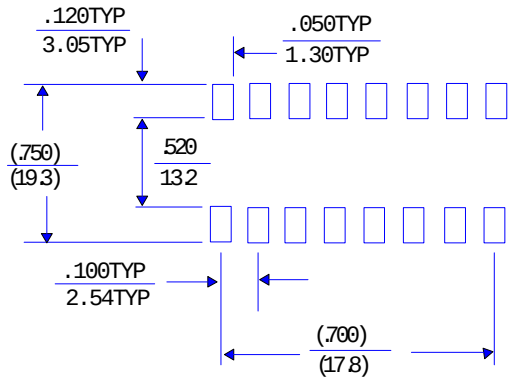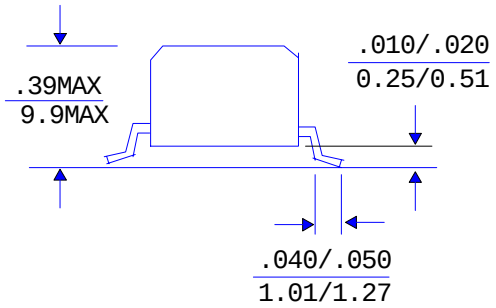
## MECHANICAL DRAWING & SCHEMATICS