220-03 and 220-13 Bulkhead Connector Receptacle Assemblies Solder Mount

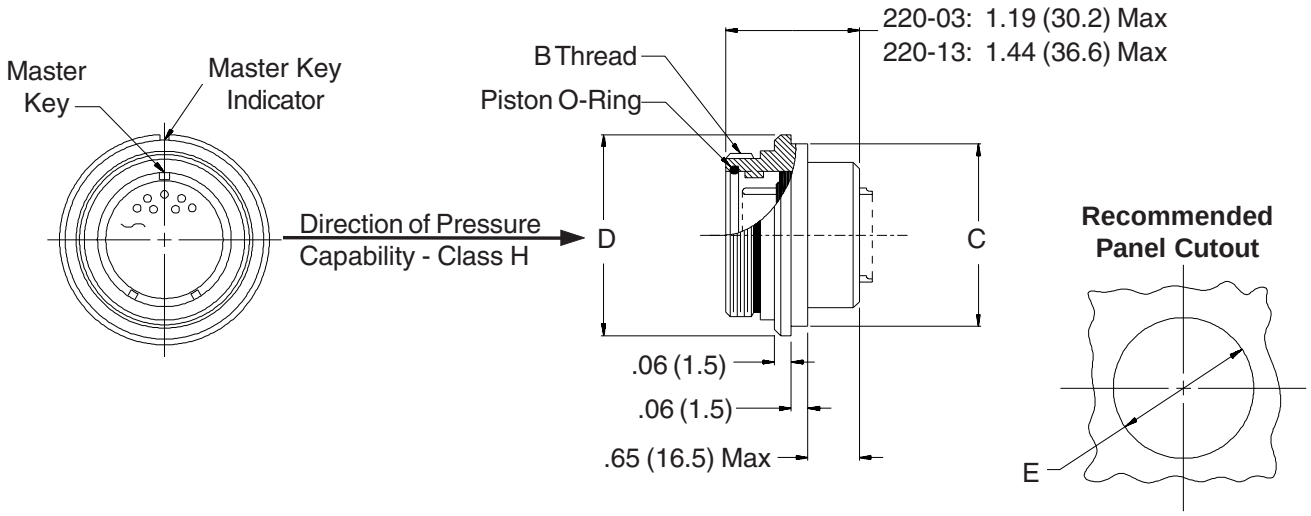

220-03 H 24-61 P N

- Series No. — 220-03
- Shell Style — 03 = Standard; 13 = Scoop Proof
- Class — H = Hermetic
- Shell Size — 24
- Insert Arrangement — 61
- P = Pins
- Polarization — N, 1, 2, 3, 4

Prior to use, lubricate O-rings with high grade silicone lubricant (Moly-kote M55 or equivalent).

Metric dimensions (mm) are indicated in parentheses.

DIMENSIONS

SHELL SIZE	B THREAD CLASS 2A	C DIA MAX		D DIA		E DIA +.010 -.000	E DIA +(0.3) -(0.0)
10	.750 - .1P - .1L	.870	(22.1)	1.00	(25.4)	.875	(22.2)
12	.875 - .1P - .1L	.995	(25.3)	1.13	(28.7)	1.000	(25.4)
14	1.000 - .1P - .1L	1.120	(28.4)	1.25	(31.8)	1.125	(28.6)
16	1.125 - .1P - .1L	1.245	(31.6)	1.38	(35.1)	1.250	(31.8)
18	1.250 - .1P - .1L	1.370	(34.8)	1.50	(38.1)	1.375	(34.9)
20	1.375 - .1P - .1L	1.495	(38.0)	1.63	(41.4)	1.500	(38.1)
22	1.500 - .1P - .1L	1.620	(41.1)	1.75	(44.5)	1.625	(41.3)
24	1.625 - .1P - .1L	1.745	(44.3)	1.88	(47.8)	1.750	(44.5)

REPLACEMENT O-RING PART NUMBERS *

SHELL SIZE	PISTON O-RING
10	2-014
12	2-016
14	2-018
16	2-020
18	2-022
20	2-024
22	2-026
24	2-028

* Parker O-ring part numbers. Compound N674-70 or equivalent.

© 2003 Glenair, Inc.
CAGE Code 06324
Printed in U.S.A.