MSH Series – 3.2 X 2.5 Ceramic SMD Oscillator

- **Low Profile SMD Device**
- **Hermetically Sealed**
- **Tri-state Function**
- **Wide Frequency Range**

ELECTRICAL SPECIFICATIONS:

Frequency Range		1.544MHZ to 70.000MHZ	1.544MHZ to 110.000MHZ	
Temperature Stability*		(See Part Number Guide for Options)		
Aging (+25°C ±3°C)		±5ppm First Year		
Operating Temperature Range		(See Part Number Guide for Options)		
Storage Temperature Range		-55°C to +125°C		
Supply Voltage (±10%)		+1.80VDC	+2.50VDC	+3.30VDC
Supply Current	1.544MHZ to 9.999MHZ	10mA max	12mA max	14mA max
	10.000MHZ to 35.999MHZ	12mA max	14mA max	16mA max
	35.000MHZ to 49.999MHZ	15mA max	20mA max	25mA max
	50.000MHZ to 125.000MHZ	25mA max	30mA max	35mA max
Output Type		HCMOS		
Symmetry (50% of waveform)		40%/60% (45%/55% Option)		
Rise/Fall Time (10% to 90% of Supply Voltage)		5nSEC	6nSEC	7nSEC
Load		15pF		
Start-up Time		2 mSec max		
* Inclusive of Temperature., Load, Voltage and Aging				

MECHANICAL DIMENSIONS:

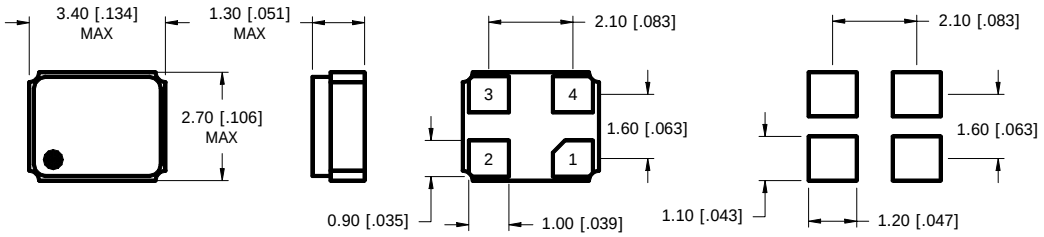

DIMENSIONS IN BRACKETS ARE IN INCHES
EXTERNAL BYPASS CAPACITOR IS RECOMMENDED

RECOMMENDED LAND PATTERN

PIN CONNECTIONS	
PIN 1	TRI-STATE
PIN 2	CASE GROUND
PIN 3	OUTPUT
PIN 4	SUPPLY VOLTAGE

TRI-STATE OPERATION	
PIN 1	PIN 3
LOGIC "1" OR N/C	OSCILLATION
LOGIC "0" OR GRD	HIGH IMPEDANCE

PART NUMBER GUIDE:

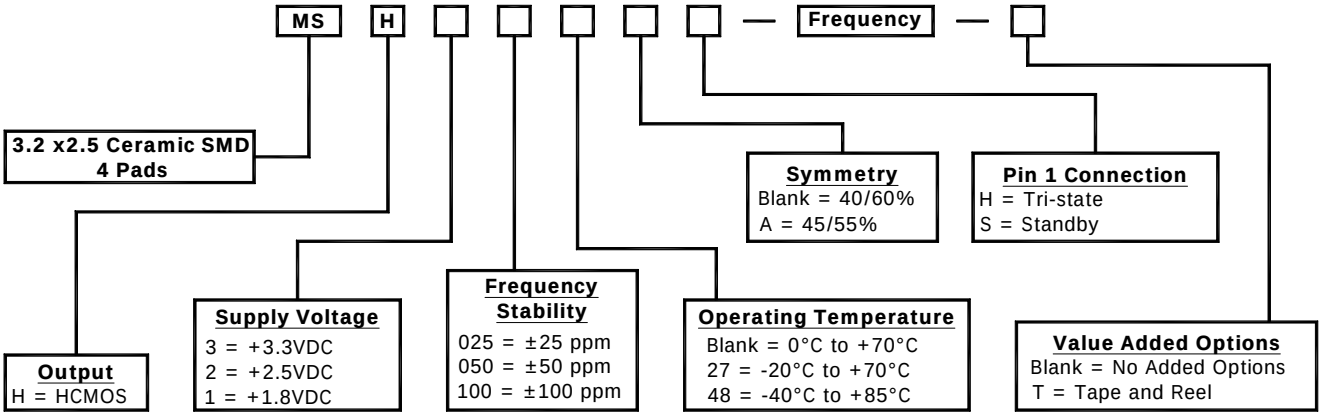

MMD Components, 30400 Esperanza, Rancho Santa Margarita, CA, 92688
Phone: (949) 709-5075, Fax: (949) 709-3536, www.mmdcomp.com
Sales@mmdcomp.com