4ϕ Bow-shaped LED (Direct Mount)

SEL6027 Series

External Dimensions

(Unit: mm)

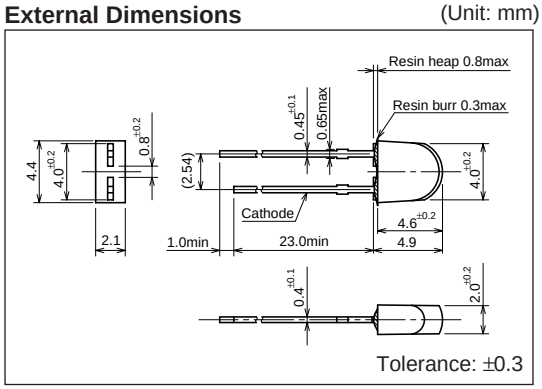

Directivity (Typical)

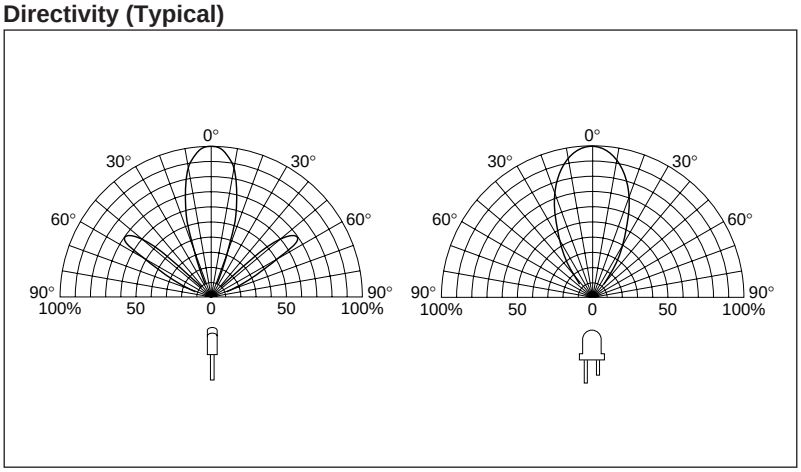

Absolute maximum ratings (Ta=25°C)

Symbol	Unit	Rating	Condition
I_F	mA	30	
ΔI_F	mA/°C	–0.45	Above 25°C
I_{FP}	mA	100	f=1kHz, tw≤100μs
V_R	V	3	
Top	°C	–30 to +85	
Tstg	°C	–30 to +100	

Electrical Optical characteristics (Ta=25°C)

Emitting color	Part Number	Lens color	Forward voltage V_F (V) typ	Forward voltage V_F (V) max	Condition I_F (mA)	Reverse current I_R (μA) max	Condition V_R (V)	Intensity I_V (mcd) typ	Condition I_F (mA)	Peak wavelength λP (nm) typ	Condition I_F (mA)	Spectrum half width Δλ (nm) typ	Condition I_F (mA)	Chip material
Red	SEL6227S	Transparent red	1.9	2.5	10	50	3	14	20	630	10	35	10	GaAsP
Orange	SEL6927A	Transparent orange	1.9	2.5	10	50	3	10	10	587	10	33	10	GaAsP
Green	SEL6427EP	Transparent green	2.0	2.5	10	50	3	26	20	560	10	20	10	GaP