PE 9664-001

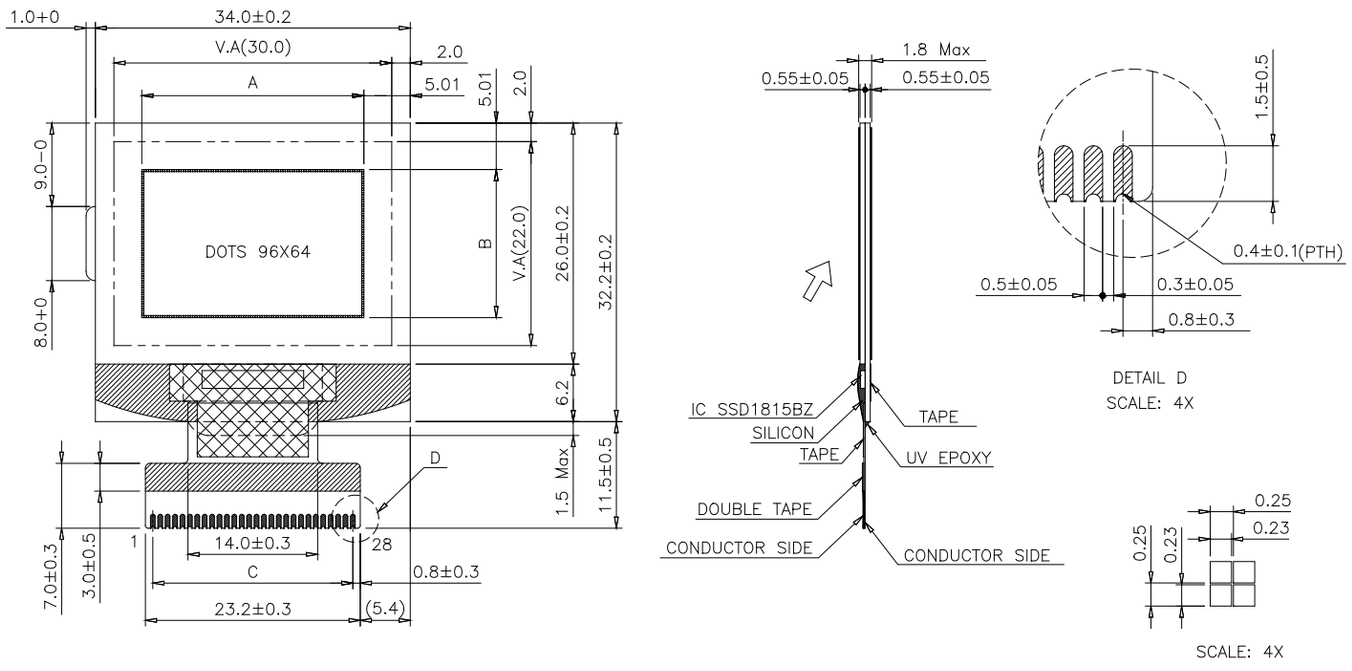

Features:

- Resolution: 96S*64C Dots
- Duty ratio: 1/65
- LCD option: FSTN
- Backlight option(H2/H1mm):None (-/1.8)
- Controller IC:SSD1815BZ

Pin Assignment

Pin no.	Symbol	Function
1	Vdd	Power Supply
2	C68/86	Switch to 6800 or 8080 MPU interface
3	Vss	Ground
4-8	VL6-VL2	Multi-level power supply for LCD
9	C2P	Capacitor selection to DC/DC voltage
10	C2N	Capacitor selection to DC/DC voltage
11	C1N	Capacitor selection to DC/DC voltage
12	C1P	Capacitor selection to DC/DC voltage
13	C3N	Capacitor selection to DC/DC voltage
14	Vee	Negative voltage supply for LCD
15	Vss	Ground
16-23	D7-D0	Data bus line
24	E/RD	Read enable
25	R/W	Read/Write selection
26	D/C	Common/ Data select
27	/RES	Reset
28	/CS1	Chip selection

Absolute Maximum Rating

Item	Symbol	Condition	Min.	Max.	Units
Supply for logic voltage	Vdd-Vss	25˚C	-0.3	4.0	V
LCD driving supply voltage	Vdd-Vee	25˚C	-12.0	-1.8	V
Input voltage	Vin	25˚C	-0.3	Vdd+0.3	V

Electrical Characteristics

Item	Symbol	Condition	Min.		Typical		Max.		Units
Power supply voltage	Vdd-Vss	25˚C	–		3.3		–		V
LCD operation voltage	Vop	Top	N	W	N	W	N	W	V
		-	–	–	–	–	–	–	V
		0˚C	–	–	–	–	–	–	V
		25˚C	–	8.8	–	9.0	–	9.2	V
		50˚C	–	–	–	–	–	–	V
		70˚C	–	–	–	–	–	–	V
LCM current consumption (No B/L)	Idd	Vdd=3.3V	–		0.15		0.23		mA
Backlight current consumption	–	–	–		–		–		mA