HDM 160GS16C

160 X 160 Dots Color Graphic, Low Power w/Touch Screen

Dimensional Drawing

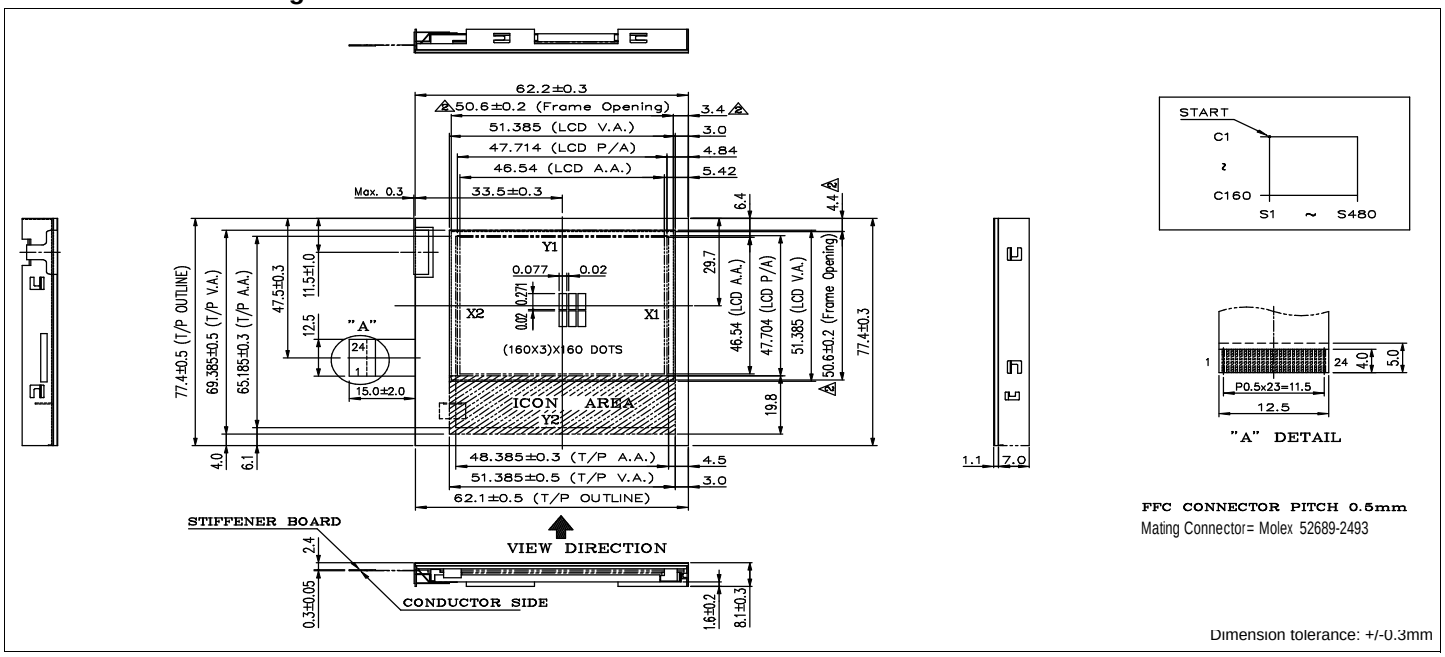

Features

Backlight.....White LED
Options.....Color STN
Touch Screen
Built-in Controller.....None

Physical Data

Module Size.....62.2W x 77.4H x 8.1T mm
Viewing Area Size.....51.385W x 51.385H mm
Dot Pitch.....0.077W x 0.271H mm
Dot Size.....0.097W x 0.291H mm
Weight.....47.4g

Power Supply

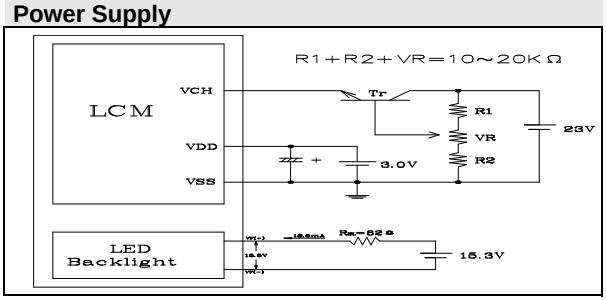

Electrical Characteristics (VDD=3.0±0.3V 25°C)

PARAMETER	SYM	CONDITION	MIN	TYP	MAX	UNIT
OPERATING VOLTAGE	V_{DD}	-	2.7	3.0	3.3	V
POWER FOR LCD	V_{CH}-V_{SS}	-	19.7	21.0	21.7	V
INPUT HIGH VOLTAGE	V_{IH}	-	.8V_{DD}	-	V_{DD}	V
INPUT LOW VOLTAGE	V_{IL}	-	GND	-	.2V_{DD}	V
POWER SUPPLY CURRENT	I_{DD}	V_{DD}=3.0V FLM=70Hz	-	1.0	1.5	mA
	I_{CH}		-	0.1	0.15	mA
LED FORWARD VOLTAGE	V_F		-	13.5	-	V
LED FORWARD CURRENT	I_F		-	18.5	-	mA
BRIGHTNESS	L	All Dots On	-	36.2	-	cd/m^2
DRIVE METHOD	1/160 Duty					

Absolute Maximum Ratings

PARAMETER	SYMBOL	MIN	MAX	UNIT
SUPPLY VOLTAGE	V_{DD}-V_{SS}	-0.3	7.0	V
LCD VOLTAGE	V_{CH}-V_{SS}	0	25.0	V
OPERATING TEMPERATURE	T_{OP}	0	50	°C
STORAGE TEMPERATURE	T_{STG}	-20	70	°C
LED Reverse Voltage	V_R	-	-16	V
LED Peak Forward Current	I_P	-	25	mA

Pin Connections

PIN NO.	SYMBOL	FUNCTION	
1	V_F (-)		Power Supply for LED Backlight
2	V_F (+)		Power Supply for LED Backlight
3	D0	H/L	Data bus
4	D1	H/L	
5	D2	H/L	
6	D3	H/L	
7	D4	H/L	
8	D5	H/L	
9	D6	H/L	
10	D7	H/L	
11	V_{SS}	0V	Ground
12	V_{SS}	0V	Ground
13	CL1	H,H? L	Display data latch clock
14	CL2	H,H? L	Latch Pulse
15	DISP.OFF	H/L	H: ON, L: OFF
16	V_{DD}		Power Supply for LOGIC
17	V_{DD}		Power Supply for LOGIC
18	M	H/L	AC driving control signal
19	FLM	H	First line marker
20	V_{CH}	Power supply for LCD	
21	LEFT	Touch Panel Connections	
22	UP		
23	RIGHT		
24	DOWN		