Ordering number : ENA0378

SANYO Semiconductors
DATA SHEET

LA73060V — Monolithic Linear IC Wideband 75Ω Video Driver

Overview

This LA73060V is a wideband 75Ω Video Driver IC. The LA73060V is ideal for use the video output driver such as TV-monitor and DVD-player equipment.

Functions

- 6channel output.
- 6MHz or 30MHz low pass filter.
- 6dB amplifier.
- Output mute.
- Y/C_MIX.
- Standby mode.

Specifications

Maximum Ratings at Ta = 25°C

Parameter	Symbol	Conditions	Ratings	Unit
Maximum supply voltage	V_{CC} max		7.0	V
Allowable power dissipation	Pd max	Ta ≤ 75°C ∗	780	mW
Operating temperature	Topr		-20 to +75	°C
Storage temperature	Tstg		-40 to +150	°C

∗ When mounted on a 114.3×76.1×1.6mm^3 glass epoxy board.

Recommended Operating Conditions at Ta = 25°C

Parameter	Symbol	Conditions	Ratings	Unit
Recommending operation voltage	V_{CC}		5.0	V
Operating voltage range	V_{CC} op		4.75 to 5.25	V
Input pin voltage application range	V_{IN}		-0.3 to V_{CC} op + 0.3	V

SANYO Semiconductor Co., Ltd.
TOKYO OFFICE Tokyo Bldg., 1-10, 1 Chome, Ueno, Taito-ku, TOKYO, 110-8534 JAPAN

Electrical Characteristics at Ta = 25°C, V_{CC} = 5V

Parameter	Symbol	SIG	Level [Vp-p]	Freq. [Hz]	IN point	OUT point	Conditions	Ratings min	Ratings typ	Ratings max	Unit
Current dissipation 1	$I_{CC}1$						No signal.	69.0	87.0	105.0	mA
Current dissipation 2	$I_{CC}2$						Standby mode,No signal.	0.3	0.4	0.5	mA
Reguratur voltage	REG3V					T27		2.8	3.0	3.2	V
Voltage gain 1	V_G1	1	0.3	100k	T4A T6A T14A T12A T14A T16A	T1 T35 T22 T30 T28 T26	Output gain.	5.5	6.0	6.5	dB
Voltage gain 2	V_G2	3	0.3	100k	T8A T12A T16A	T32 T24 T19	Output gain.	5.5	6.0	6.5	dB
Frequency characteristics 1 (CV,Y,P_y,R,G,B)	V_F1 (SD)	1	0.3	6M	T4A T6A T14A T12A T14A T16A	T1 T35 T22 T30 T28 T26	6MHz LPF is selected. f = 6MHz / 100kHz.	-3	0.0	3	dB
Frequency characteristics 2 (C,P_r,P_b)	V_F2 (SD)	3	0.3	6M	T8A T12A T16A	T32 T24 T19	6MHz LPF is selected. f = 6MHz / 100kHz.	-3	0.0	3	dB
Frequency characteristics 3 (CV,Y,P_y,R,G,B)	V_F3 (SD)	1	0.3	27M	T4A T6A T14A T12A T14A T16A	T1 T35 T22 T30 T28 T26	6MHz LPF is selected. f = 27MHz / 100kHz.		-40	-35	dB
Frequency characteristics 4 (C,P_r,P_b)	V_F4 (SD)	3	0.3	27M	T8A T12A T16A	T32 T24 T19	6MHz LPF is selected. f = 27MHz / 100kHz.		-40	-35	dB
Frequency characteristics 5	V_F5 (HD)	1	0.3	20M	T14A T12A T14A T16A	T22 T30 T28 T26	30MHz LPF is selected. f =20MHz / 100kHz.	-1	0.0	1	dB
Frequency characteristics 6	V_F6 (HD)	3	0.3	20M	T12A T16A	T24 T19	30MHz LPF is selected. f = 20MHz / 100kHz.	-1	0.0	1	dB
Frequency characteristics 7	V_F7 (HD)	1	0.3	30M	T14A T12A T14A T16A	T22 T30 T28 T26	30MHz LPF is selected. f = 30MHz / 100kHz.	-5	-2.5	0	dB
Frequency characteristics 8	V_F8 (HD)	3	0.3	30M	T12A T16A	T24 T19	30MHz LPF is selected. f = 30MHz / 100kHz.	-5	-2.5	0	dB
Frequency characteristics 9	V_F9 (HD)	1	0.3	75M	T14A T12A T14A T16A	T22 T30 T28 T26	30MHz LPF is selected. f = 75MHz / 100kHz.		-40	-35	dB
Frequency characteristics 10	V_F10 (HD)	3	0.3	75M	T12A T16A	T24 T19	30MHz LPF is selected. f = 75MHz / 100kHz.		-40	-35	dB

Continued on next page.

Continued from preceding page.

Parameter	Symbol	SIG	Level [Vp-p]	Freq. [Hz]	IN point	OUT point	Conditions	Ratings min	Ratings typ	Ratings max	Unit
2nd order distortion 1 (SD)	Dst1 (SD)	1	0.7	4M	T4A T6A T14A T12A T14A T16A	T1A T35A T22A T30A T28A T26A			-40	-35	dB
2nd order distortion 2 (SD)	Dst2 (SD)	3	0.7	4M	T8A T12A T16A	T32A T24A T19A			-40	-35	dB
2nd order distortion 3 (HD)	Dst3 (HD)	1	0.7	10M	T14A T12A T14A T16A	T22A T30A T28A T26A			-40	-35	dB
2nd order distortion 4 (HD)	Dst4 (HD)	3	0.7	10M	T8A T12A T16A	T32A T24A T19A			-40	-35	dB
Clipping output level 1	V_O max1	3	2	100k	T4A T6A T14A T12A T14A T16A	T1 T35 T22 T30 T28 T26	Output level for clipping.	2.2	2.4		Vp-p
Clipping output level 2	V_O max2	3	2	100k	T8A T12A T16A	T32 T24 T19	Output level for clipping.	2.2	2.4		Vp-p
Amount of mute attenuation 1	V_M1	1	0.3	4M	T4A T6A T14A T12A T14A T16A	T1 T35 T22 T30 T28 T26			-60	-50	dB
Amount of mute attenuation 2	V_M2	3	0.3	4M	T8A T12A T16A	T32 T24 T19			-60	-50	dB
Crosstalk between channels 1	$V_{CT}1$	1	0.3	4M	T4A T6A T14A T12A T14A T16A				-60	-50	dB
Crosstalk between channels 2	$V_{CT}2$	3	0.3	4M	T8A T12A T16A				-60	-50	dB

Continued on next page.

Continued from preceding page.

Parameter	Symbol	SIG	Level [Vp-p]	Freq. [Hz]	IN point	OUT point	Conditions	Ratings min	Ratings typ	Ratings max	Unit
Video S/N 1 (SD)	$V_{S/N}1$ (SD)	2	0.65		T4A T6A T14A T12A T14A T16A	T1A T35A T22A T30A T28A T26A	V_{IN} = Video (50% White), The band is between 100kHz and 4.2MHz		-70	-60	dB
Video S/N 2 (HD)	$V_{S/N}2$ (HD)	2	0.65		T14A T12A T14A T16A	T22A T30A T28A T26A	V_{IN} = Video (50% White), The band is between 100kHz and 30MHz		-60	-50	dB
Group delay 1 (SD)	GD1 (SD)	1	0.3	6M	T4A T6A T14A T12A T14A T16A	T1 T35 T22 T30 T28 T26	Input / Output delay time. f=6MHz/100kHz		20	30	ns
Group delay 2 (SD)	GD2 (SD)	3	0.3	6M	T8A T12A T16A	T32 T24 T19	Input / Output delay time. f=6MHz/100kHz		20	30	ns
Group delay 3 (HD)	GD3 (HD)	1	0.3	30M	T14A T12A T14A T16A	T22 T30 T28 T26	Input / Output delay time. f=30MHz/100kHz		10	20	ns
Group delay 4 (HD)	GD4 (HD)	3	0.3	30M	T12A T16A	T24 T19	Input / Output delay time. f=30MHz/100kHz		10	20	ns

Input signal

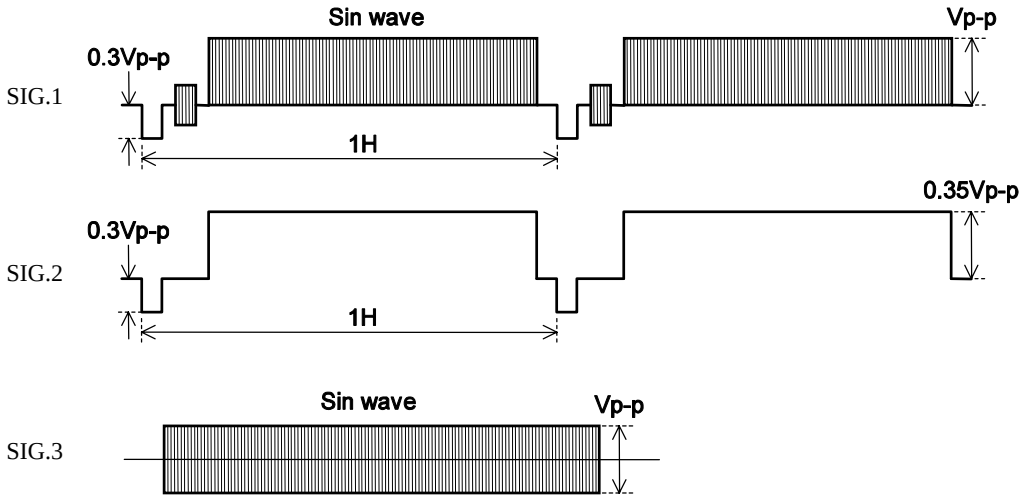

Truth Table

SW No.	Pin No.	Function	H (2.3V to V_{CC})	L (0 to 0.7V)
SW1	5	Y/C MIX	OFF	ON
SW2	7	CV Mute control	OFF	ON
SW3	11	Power save control	OFF	ON
SW4	13	Input control	CLAMP ON(RGB Mode)	BIAS ON(Component Mode)
SW5	15	Filter control	6MHz LPF ON(RGB Mode)	30MHz LPF ON(Component Mode)
SW6	17	Output control	RGB ON(RGB Mode)	Component ON(Component Mode)
SW7	20	RGB&Component Mute control	OFF	ON

Package Dimensions

unit : mm

3247A

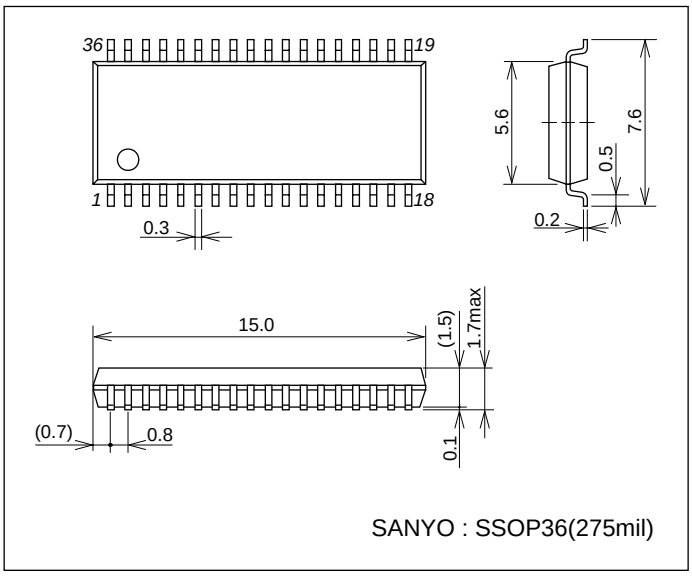

Block Diagram

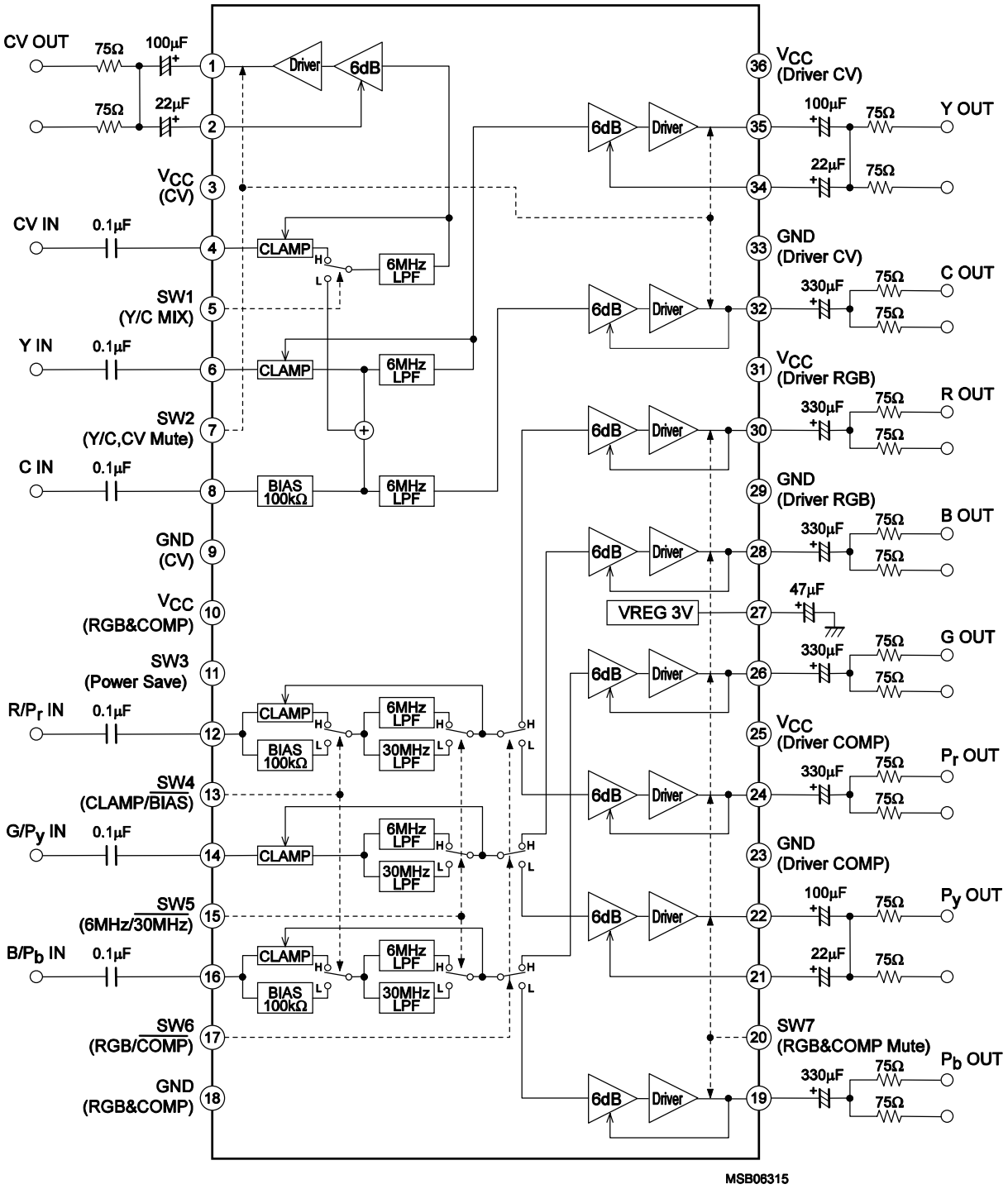

Test Circuit Diagram

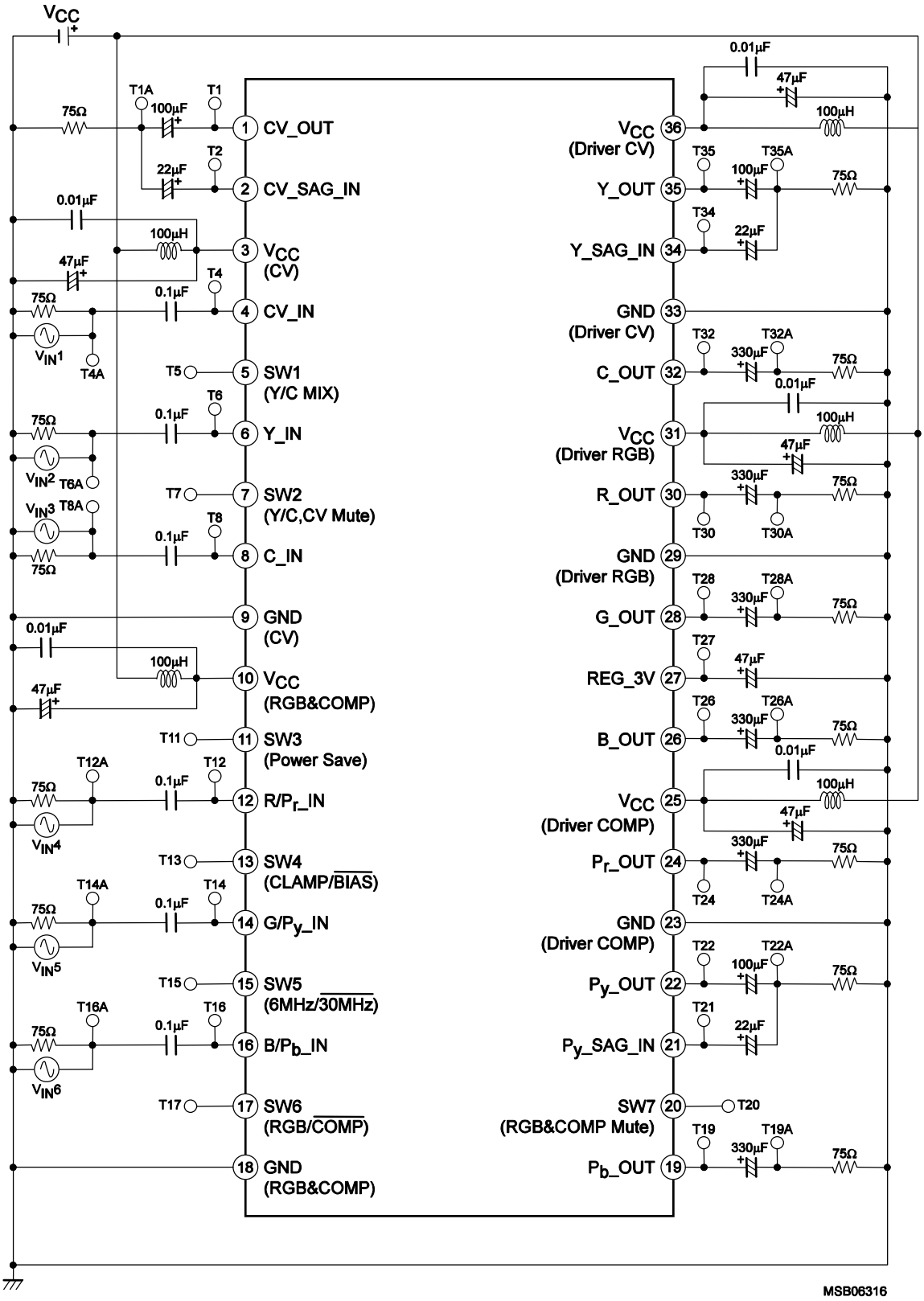

Pin Functions

Pin No.	Pin Name	Signal Wave Form	Equivalent Circuit
1	CV_OUT	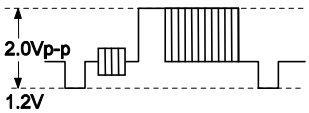	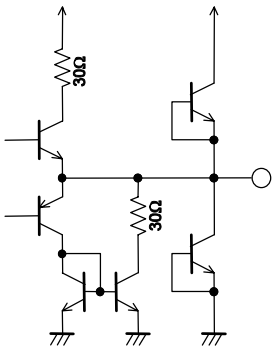
35	Y_OUT	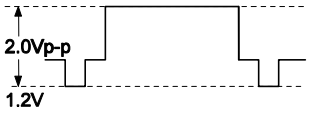	
2	CV_SAG_IN	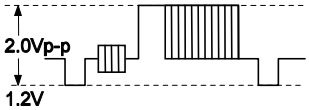	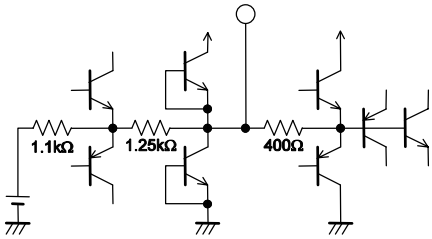
21 34	P_y_SAG_IN Y_SAG_IN	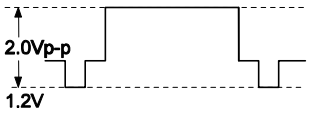	
4	CV_IN	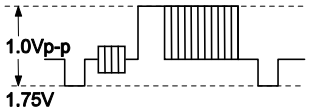	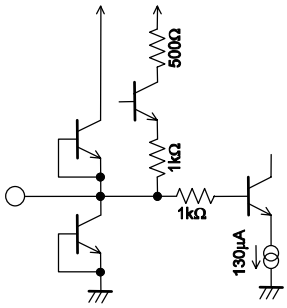
6	Y_IN	Y_IN,Py_IN 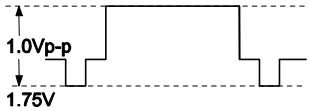	
14	G/P_y_IN	RGB 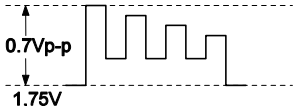	
5 7 11 13 15 17 20	SW1 SW2 SW3 SW4 SW5 SW6 SW7	*See the Truth Table.	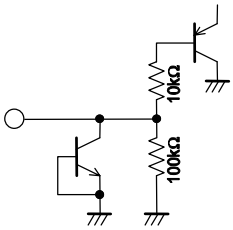
3 10 25 31 36	V_{CC} (CV) V_{CC} (RGB&COMP) V_{CC} (Driver COMP) V_{CC} (Driver RGB) V_{CC} (Driver CV)		

Continued on next page.

Continued from preceding page.

Pin No.	Pin Name	Signal Wave Form	Equivalent Circuit
8	C_IN	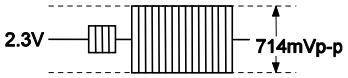	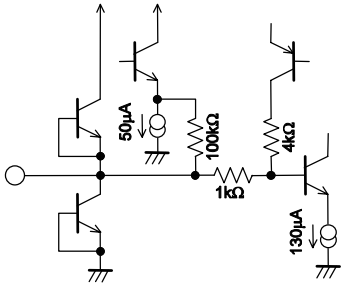
12 16	R/P_r_IN B/P_b_IN	RGB 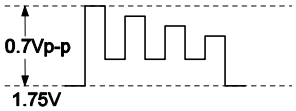 Component 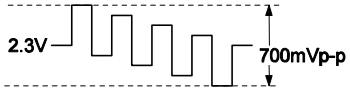	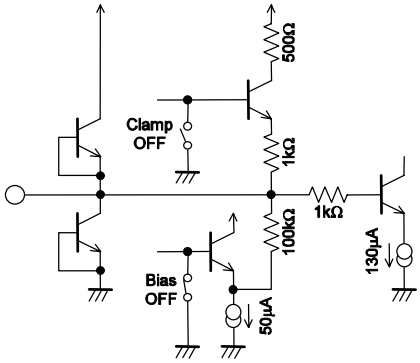
26 28 30	B_OUT G_OUT R_OUT	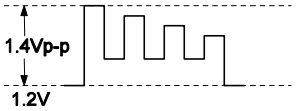	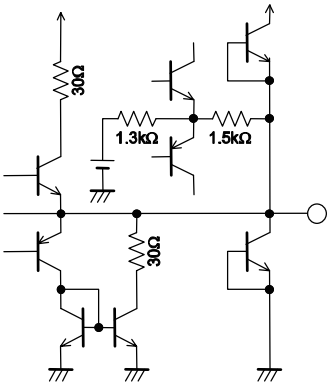
19 24	P_b_OUT P_r_OUT	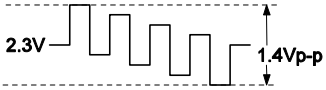	
32	C_OUT	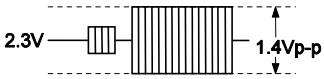	
9 18 23 29 33	GND (CV) GND (RGB&COMP) GND (Driver COMP) GND (Driver RGB) GND (Driver CV)		
27	REG3V	DC : 3.0V	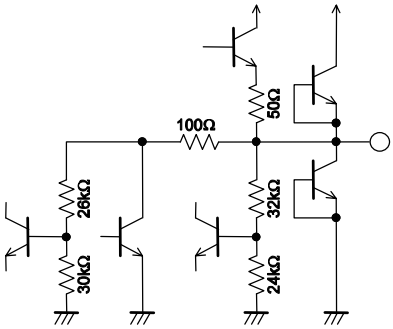

This catalog provides information as of March, 2006. Specifications and information herein are subject to change without notice.